dust should be cleaned from the brake assembly and drum using a petrol dampened cloth. Do not blow or brush off the dust because it is asbestos based and thus harmful if inhaled. Light contamination from grease can be removed from the surface of the brake linings using a solvent; attempts at removing heavier contamination are less likely to be successful because some of the lubricant will have been absorbed by the lining material which will severely reduce the braking performance.

53 Brake drag – drum brakes

Incorrect adjustment. Re-adjust the brake operating mechanism.

Drum warped or oval. This can result from overheating, impact or uneven tension of the wheel spokes. The condition is difficult to correct, although if slight ovality only occurs, skimming the surface of the brake drum can provide a cure. This is work for a specialist engineer. Renewal of the complete wheel hub is normally the only satisfactory solution.

Weak brake shoe return springs. This will prevent the brake lining/shoe units from pulling away from the drum surface once the brake is released. The springs should be renewed.

Brake camshaft, lever pivot or cable poorly lubricated. Failure to attend to regular lubrication of these areas will increase operating resistance which, when compounded, may cause tardy operation and poor release movement.

54 Brake lever or pedal pulsates in operation – drum brakes

Drums warped or oval. This can result from overheating, impact or uneven spoke tension. This condition is difficult to correct, although if slight ovality only occurs skimming the surface of the drum can provide a cure. This is work for a specialist engineer. Renewal of the hub is normally the only satisfactory solution.

55 Drum brake noise

Drum warped or oval. This can cause intermittent rubbing of the brake linings against the drum. See the preceding Section.

Brake linings glazed. This condition, usually accompanied by heavy lining dust contamination, often induces brake squeal. The surface of the linings may be roughened using glass-paper or a fine file.

56 Brake induced fork judder

Worn front fork stanchions and legs, or worn or badly adjusted steering head bearings. These conditions, combined with uneven or pulsating braking as described in Sections 50 and 54 will induce more or less judder when the brakes are applied, dependent on the degree of wear and poor brake operation. Attention should be given to both areas of malfunction. See the relevant Sections.

Electrical problems

57 Battery dead or weak

Battery faulty. Battery life should not be expected to exceed 3 to 4 years, particularly where a starter motor is used regularly. Gradual sulphation of the plates and sediment deposits will reduce the battery performance. Plate and insulator damage can often occur as a result of vibration. Complete power failure, or intermittent failure, may be due to a broken battery terminal. Lack of electrolyte will prevent the battery maintaining charge.

Battery leads making poor contact. Remove the battery leads and clean them and the terminals, removing all traces of corrosion and tarnish. Reconnect the leads and apply a coating of petroleum jelly to the terminals.

Load excessive. If additional items such as spot lamps, are fitted, which increase the total electrical load above the maximum alternator output, the battery will fail to maintain full charge. Reduce the electrical load to suit the electrical capacity.

Regulator/diode board failure.

Alternator generating coils open-circuit or shorted.

Charging circuit shorting or open circuit. This may be caused by frayed or broken wiring, dirty connectors or a faulty ignition switch. The system should be tested in a logical manner. See Section 60.

58 Battery overcharged

Diode board/regulator faulty. Overcharging is indicated if the battery becomes hot or it is noticed that the electrolyte level falls repeatedly between checks. In extreme cases the battery will boil causing corrosive gases and electrolyte to be emitted through the vent pipes.

Battery wrongly matched to the electrical circuit. Ensure that the specified battery is fitted to the machine.

59 Total electrical failure

Fuse blown. Check the main fuse. If a fault has occurred, it must be rectified before a new fuse is fitted.

Battery faulty. See Section 57.

Earth failure. Check that the main earth strap from the battery is securely affixed to the gearbox and is making a good contact.

Ignition switch or power circuit failure. Check for current flow through the battery positive lead (red) to the ignition switch. Check the ignition switch for continuity.

60 Circuit failure

Cable failure. Refer to the machine's wiring diagram and check the circuit for continuity. Open circuits are a result of loose or corroded connections, either at terminals or in-line connectors, or because of broken wires. Occasionally, the core of a wire will break without there being any apparent damage to the outer plastic cover.

Switch failure. All switches may be checked for continuity in each switch position, after referring to the switch position boxes incorporated in the wiring diagram for the machine. Switch failure may be a result of mechanical breakage, corrosion or water.

Fuse blown. Refer to the wiring diagram to check whether or not a circuit fuse is fitted. Replace the fuse, if blown, only after the fault has been identified and rectified.

61 Bulbs blowing repeatedly

Vibration failure. This is often an inherent fault related to the natural vibration characteristics of the engine and frame and is, thus, difficult to resolve. Modifications of the lamp mounting, to change the damping characteristics may help.

Intermittent earth. Repeated failure of one bulb, particularly where the bulb is fed directly from the generator, indicates that a poor earth exists somewhere in the circuit. Check that a good contact is available at each earthing point in the circuit.

Reduced voltage. Where a quartz-halogen bulb is fitted the voltage to the bulb should be maintained or early failure of the bulb will occur. Do not overload the system with additional electrical equipment in excess of the system's power capacity and ensure that all circuit connections are maintained clean and tight.

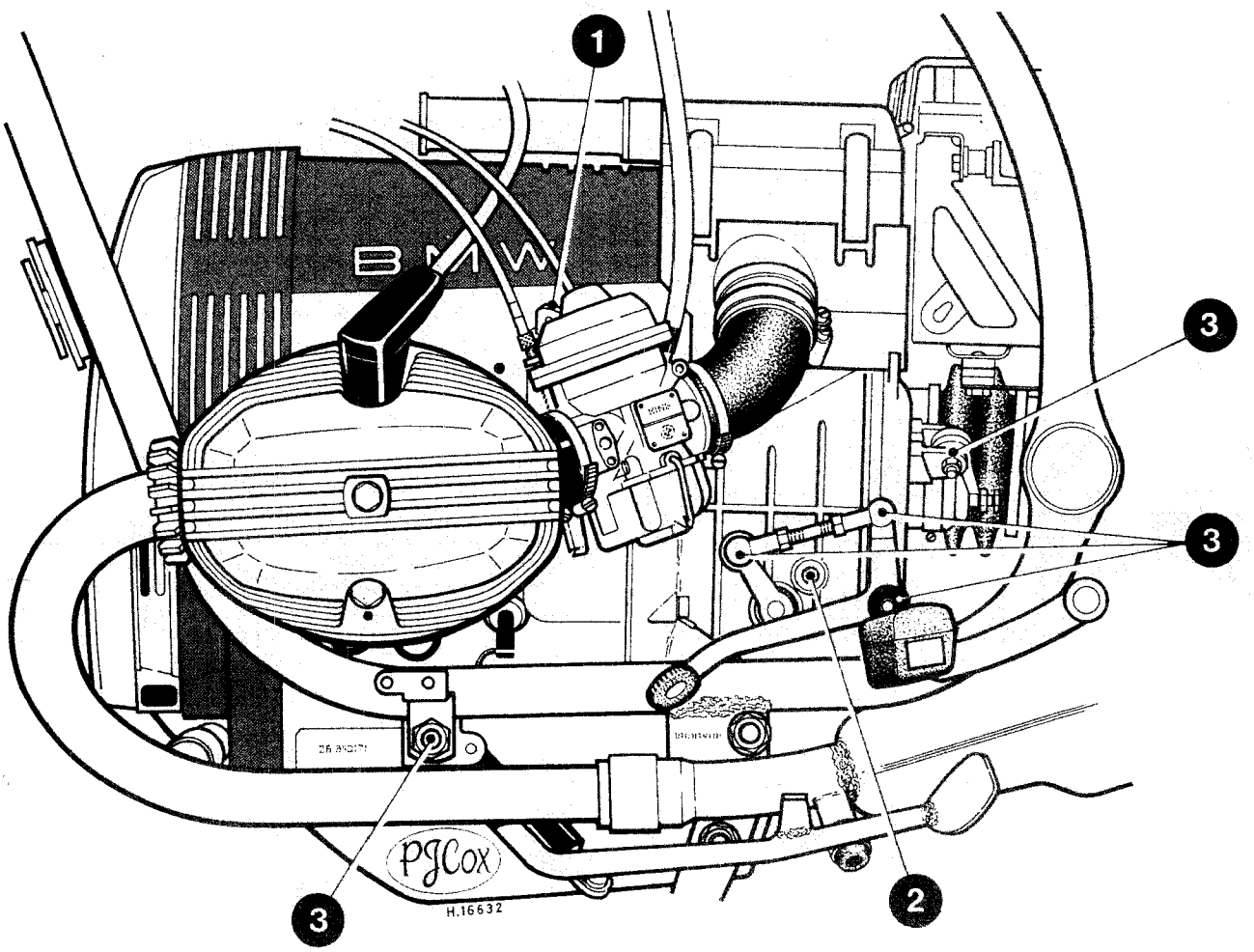

❶

Engine

Capacity:

/5, /6, /7 up to 1980 without oil cooler, R80G/S, R45, R65 up to 1980	2.25 litres (3.96 Imp pt/2.38 US qt)
/5, /6, /7 up to 1980 with oil cooler, /7 1981 on without oil cooler, R80, R80ST, R45, R65 1981 on	2.50 litres (4.40 Imp pt/2.64 US qt)
/7 1981 on with oil cooler	2.75 litres (4.84 Imp pt/2.91 US qt)
Recommended lubricant	Good quality HD oil suitable for 4-stroke spark ignition engines. API classification SE, SF or SG (see chart in Routine maintenance for viscosities)

❷

Gearbox

Capacity	800cc (1.41 Imp pt/0.85 US qt)
Recommended lubricant	Good quality hypoid gear oil API class GL-5 or to specification MIL-L-2105 B or C, viscosity SAE 90 above 5°C (41°F) SAE 80 below 5°C (41°F), alternatively SAE 80W90

❸

All greasing points	High melting-point lithium fibre-based grease, eg Shell Retinax A

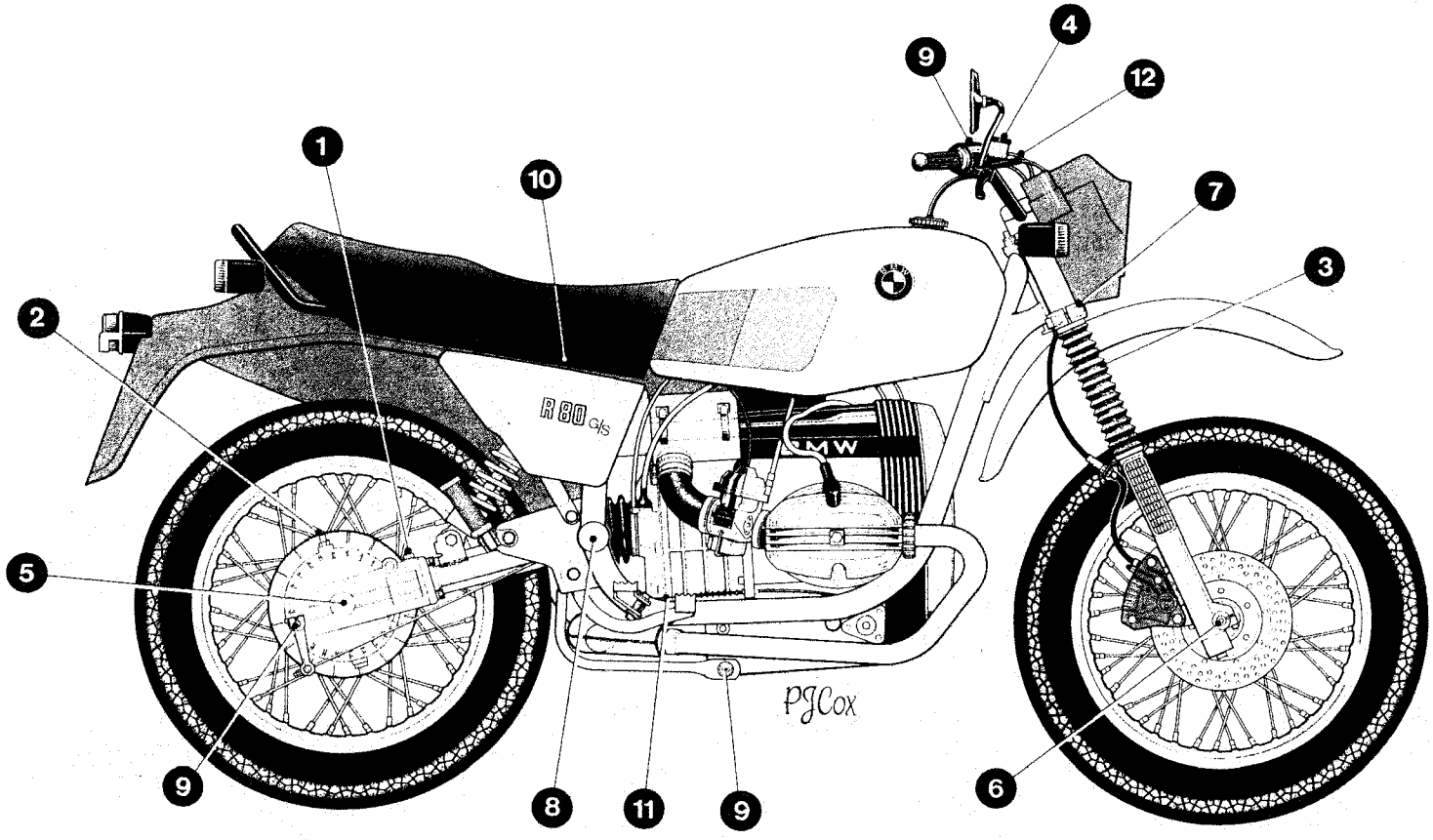

1 Driveshaft	
Capacity:	
/5 up to mid 1973	100cc (0.18 Imp pt/0.11 US qt)
All other models	150cc (0.26 Imp pt/0.16 US qt)
Recommended lubricant	Good quality hypoid gear oil API class GL-5 or to specification MIL-L-2105 B or C, viscosity SAE 90 above 5°C (41°F) SAE 80 below 5°C (41°F), alternatively SAE 80W90
2 Rear bevel drive	
Capacity:	
All models up to 1980	250cc (0.44 Imp pt/0.26 US qt)
All models 1981 on	350cc (0.61 Imp pt/0.37 US qt)
Recommended lubricant	As driveshaft type
3 Front forks	Recommended brands and types only – see Chapter 6
4 Brake fluid	DOT 4 (ATE SL)
5 Rear wheel/final drive splines	Molykote BR2 or liquid Moly LM47L
6 Wheel bearings	High melting-point lithium fibre-based grease, eg Shell Retinax A
7 Steering head bearings	As wheel bearing type
8 Swinging arm bearings	As wheel bearing type
9 All greasing points	As wheel bearing type
10 Battery terminals	Petroleum jelly or acid-free grease
11 Control cable nipples and all other pivots	Engine oil or light machine oil
12 Cables – non nylon lined	As above
ATU pivots – up to 1978 models only	Bosch grease Ft 1v4
ATU shaft – up to 1978 models only	Bosch grease Ft 1v22 or Ft 1v26
Front brake master cylinder pushrod and caliper pivot pin – /6, /7 up to 1980	Molykote BR2 or liquid Moly LM47L

Routine maintenance

Refer to Chapter 10 for information relating to the 1986 on models

Periodic routine maintenance is a continuous process which should commence immediately the machine is used. The object is to maintain all adjustments and to diagnose and rectify minor defects before they develop into more extensive, and often more expensive, problems.

It follows that if the machine is maintained properly, it will both run and perform with maximum efficiency, and be less prone to unexpected breakdowns. Regular inspection of the machine will show up any parts which are wearing, and with a little experience, it is possible to obtain the maximum life from any one component, renewing it when it becomes so worn that it is liable to fail.

Regular cleaning can be considered as important as mechanical maintenance. This will ensure that all the cycle parts are inspected regularly and are kept free from accumulations of road dirt and grime.

All intervals are intended as a guide only; as a machine gets older it develops individual faults which require more frequent attention and if used under particularly arduous conditions it is advisable to reduce the period between each check.

For ease of reference, most service operations are described in detail under the relevant heading. However, if further general information is required, this can be found under the pertinent Section heading and Chapter in the main text.

Although no special tools are required for routine maintenance, a good selection of general workshop tools is essential. Included in the tools must be a range of metric ring or combination spanners and a selection of good quality Allen keys; all necessary tools being included in the machine's toolkit.

Service intervals – mileage:

BMW maintenance is grouped into two parts, a minor and a major service which must be carried out at the following intervals:

/5 models:
Minor service every 8000 miles (12 000 km) starting with the first 4000 miles (6000 km)
Major service every 8000 miles (12 000 km) starting with the first 8000 miles (12 000 km)
All other models:
Minor service every 10 000 miles (15 000 km) starting with the first 5000 miles (7500 km)
Major service every 10 000 miles (15 000 km) starting with the first 10 000 miles (15 000 km)

Therefore minor and major services should be carried out alternately at every 4000 miles (6000 km) for /5 models, every 5000 miles (7500 km) for all other models.

Service intervals – time:

If the machine is not used regularly, or does not cover a high mileage, BMW recommend two major services be carried out each year to preserve the machine's performance and reliability. Therefore, the minor service should be carried out every three months, the major service every six months.

Additional recommendations:

Engine oil – in normal use the engine oil should be changed every six months at the latest. If the machine is used in temperatures below 0°C (32°F), or for short, local journeys only, the oil should be changed every 2000 miles (3000 km) or three months at the latest.

Gearbox oil – must be changed at least once annually.

Driveshaft oil – must be changed at least once annually.

Rear bevel drive oil – must be changed at least once annually.

Front fork oil – must be changed at least once annually.

Hydraulic brake fluid – must be changed annually.

Wheel and steering head bearings – if conditions are very severe the bearings must be cleaned and packed with new grease every 16 000 miles (24 000 km) for /5 models, every 20 000 miles (30 000 km) for all other models. Refer to the relevant Sections of Chapters 8 and 6.

Battery – should be checked at least every month.

Air filter – should be cleaned and renewed at more frequent intervals if the machine is used in very dusty or severe conditions.

Cleaning the machine

Keeping the motorcycle clean should be considered as an important part of the routine maintenance, to be carried out whenever the need arises. A machine cleaned regularly will not only succumb less speedily to the inevitable corrosion of external surfaces, and hence maintain its market value, but will be far more approachable when the time comes for maintenance or service work. Furthermore, loose or failing components are more readily spotted when not partially obscured by a mantle of road grime and oil.

Surface dirt should be removed using a sponge and warm, soapy water; the latter being applied copiously to remove the particles of grit which might otherwise cause damage to the paintwork and polished surfaces.

Oil and grease are removed most easily by the application of a cleaning solvent such as 'Gunk' or 'Jizer'. The solvent should be applied when the parts are still dry and worked in with a stiff brush. Large quantities of water should be used when rinsing off, taking care that water does not enter the carburettors, air cleaners or electrics.

Application of a wax polish to the cycle parts and a good chrome cleaner to the chrome parts will give a good finish. Always wipe the machine down if used in the wet.

Daily (pre-ride check)

It is recommended that the following items are checked whenever the machine is about to be used. This is important to prevent the risk of unexpected failure of any component while riding the machine and with experience, can be reduced to a simple checklist which will only take a few moments to complete. For those owners who are not inclined to check all items with such frequency, it is suggested that the best course is to carry out the checks in the form of a service which can be undertaken each week or before any long journey. It is essential that all items are checked and serviced with reasonable frequency.

1 *Check the tyres*

Check the tyre pressures with a gauge that is known to be accurate. It is worthwhile purchasing a pocket gauge for this purpose because the gauges on garage forecourt airlines are notoriously inaccurate. The pressures, which should be checked with the tyres cold, are given in the Specifications Section of Chapter 8. Note that they are recommended by BMW **only** for the tyres fitted as standard to their machines and should be checked by reference to the tyre pressure warning label on the machine in case different types of tyre were fitted at the factory. If the machine is fitted subsequently with another make and/or type of tyre, the owner must check with the tyre manufacturer to find out if different pressures are necessary. In most cases the BMW importer will be able to help with advice on recommended tyres and pressures. Finally, ensure at all times that the pressures are suited to the load the machine is carrying and the speed at which it will be travelling.

At the same time as the tyre pressures are checked, examine the tyres themselves. Check them for damage, especially splitting of the sidewalls. Remove any small stones or other road debris caught between the treads. When checking the tyres for damage, they should be examined for tread depth in view of both the legal and safety aspects. It is vital to keep the tread depth within the UK legal limits of 1 mm of depth over three-quarters of the tread breadth around the entire circumference with no bald patches. Many riders, however, consider nearer 2 mm to be the limit for secure roadholding, traction, and braking, especially in adverse weather conditions, and it should be noted that BMW recommend minimum tread depths of 2.0 mm (0.08 in) for speeds below 80 mph (130 km/h), or 3 mm (0.12 in) for speeds above 80 mph (130 km/h), measured at the centre of the tread.

If new tyres are to be fitted, they must be of the correct size and speed or load rating, as listed in the Specifications Section of Chapter 8. However, since BMW motorcycles have proved especially sensitive to particular makes and types of tyre as well as to tyre pressures, great care must be taken when choosing new tyres. First check with the importer or a good local BMW dealer what types of currently-available tyre are approved for use on your particular model; do not forget to check the recommended tyre pressures, if different. **Do not** use any other tyre than those that are approved; if a particular make and/or type is not approved the factory, which conducts exhaustive tests, will have a very good reason for this. Once you have made your choice from the available selection, always fit front and rear tyres from the same manufacturer; never mix different tyre brands. Also, fit new inner tubes and rim tapes (where fitted) with every new tyre and use only tubes and rim tapes of the same make as the new tyre. Finally note the new pressures (if different) at all loads and speeds and keep this with the machine.

2 *Check the engine oil level*

Position the machine upright on its centre stand, on level ground.

The engine must have been stopped for some time (at least 5 minutes) so that the level settles before it can be checked accurately. Unscrew the filler plug/dipstick from its boss in the crankcase left-hand side, wipe it clean and refit it so that the plug rests on the crankcase; **do not** screw it in. Withdraw the dipstick and note the level of oil on it, which should be between the 'Max' and 'Min' lines with the machine supported upright on its centre stand.

Never allow the engine to run with the level below the 'Min' line, and do not overfill it so that the level is above the 'Max' line.

Use only a good quality, heavy duty oil suitable for 4-stroke spark ignition engines. Refer to the accompanying thermometer chart to decide what viscosity of oil is necessary at the prevailing outside temperatures. BMW recommend that a medium range multigrade, eg 10W30 is preferable to a wide range multigrade, such as 10W50, and that multigrades are preferable to monogrades.

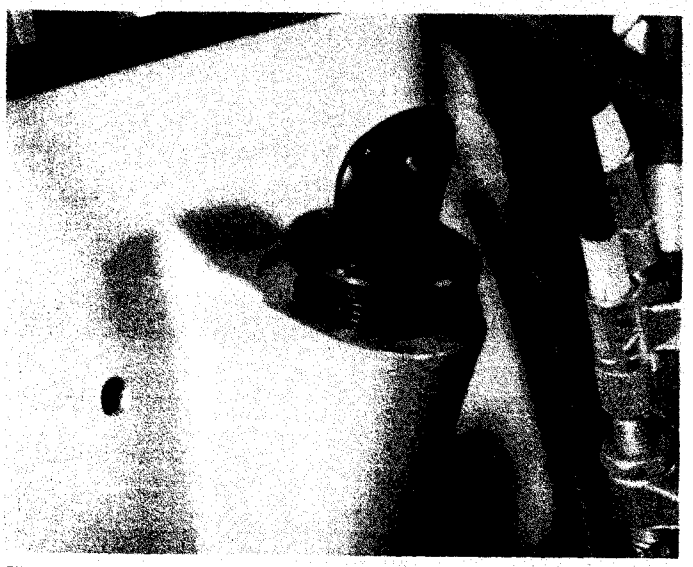

Filler plug/dipstick must rest on crankcase as shown for accurate level to be recorded – do not screw it in

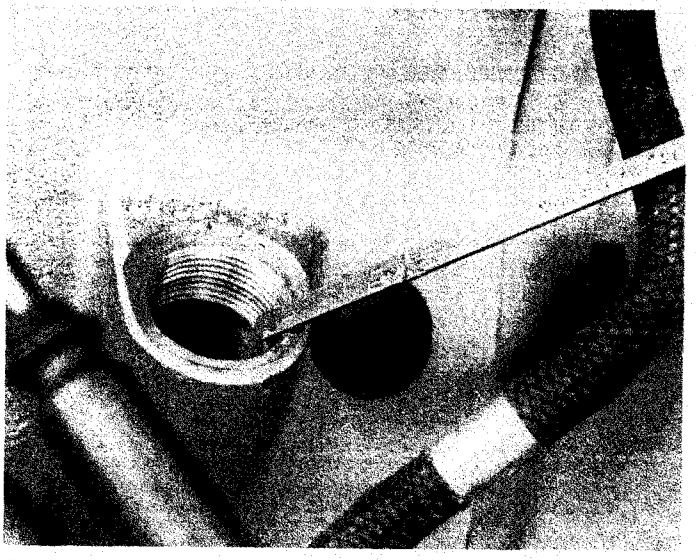

Oil level must be between 'Max' and 'Min' level lines

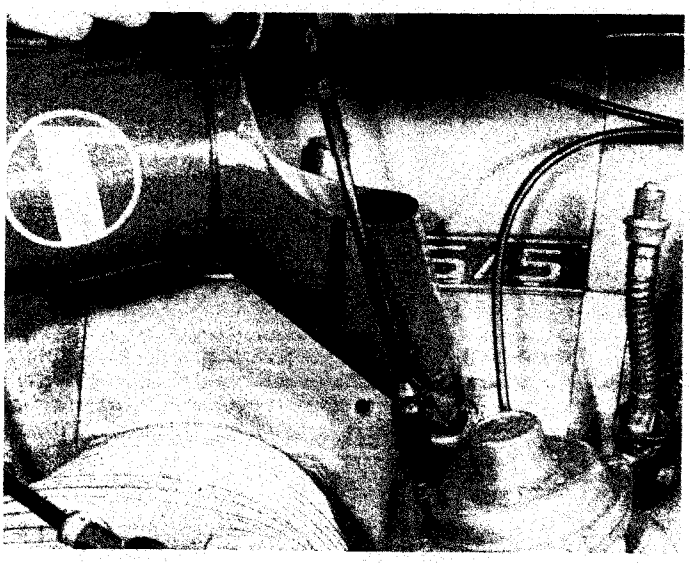

Use only good quality oil of specified type when topping up

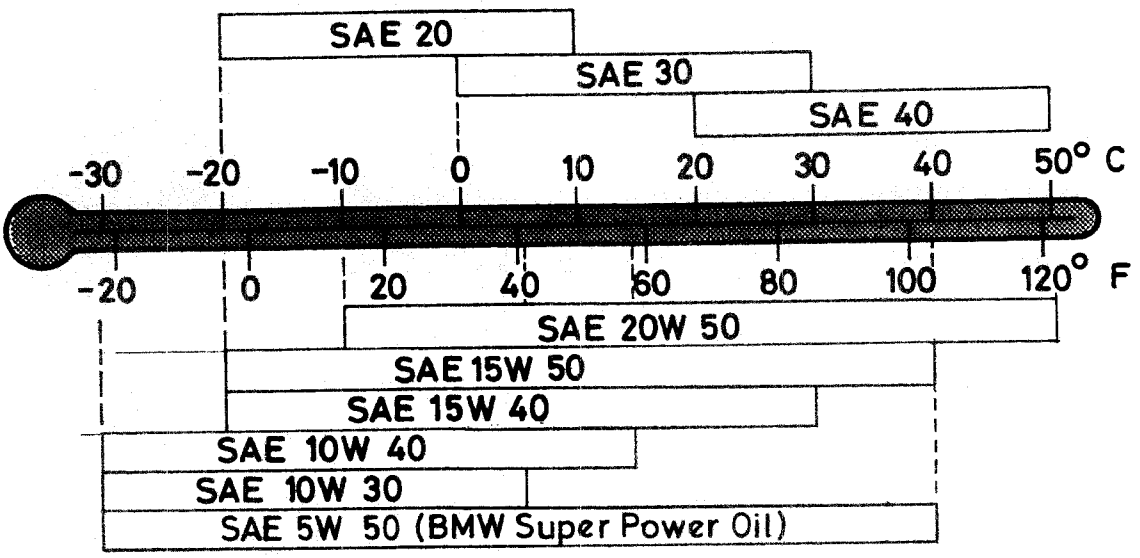

Oil viscosity selection chart

A small funnel is useful when topping up, especially if it can be carried on the machine. To fill the engine from 'Min' to 'Max' marks on the dipstick requires approximately 1.0 litre (1.76 Imp pint/1.06 US qt) on all models up to 1980, 0.85 litre (1.5 Imp pint/0.9 US qt) on all models from 1981 on. Renew the sealing washer if it is damaged or flattened and refit the dipstick, tightening it securely.

3 *Check the fuel level*

Checking the petrol level may seem obvious, but it is all too easy to forget. Ensure that you have enough petrol to complete your journey, or at least to get you to the nearest petrol station.

4 *Legal check*

Check that all lights, turn signals, horn and speedometer are working correctly to make sure that the machine complies with all legal requirements in this respect. Check also that the headlamp is correctly aimed. The vertical aim must be aligned so that with the machine standing on its wheels on level ground with the rider (and pillion passenger, if one is regularly carried) seated normally, the main beam centre (as shown on a wall 25 feet away) must be at the same height from the ground as the centre of the headlamp itself. This is adjusted by slackening the headlamp mounting bolts and tilting the headlamp to the correct angle. On machines with RS or RT fairings, ensure that the fairing headlamp glass is completely clean and dry so that there can be no reduction of the headlamp's light output. Detach the glass and clean it regularly with a suitable detergent to avoid this.

5 *Check the brakes*

Check that the front and rear brakes work effectively and without binding. Ensure that the rod linkages and the cables, are lubricated and properly adjusted. Check the fluid level in the master cylinder reservoir, where appropriate, and ensure that there are no fluid leaks. Should topping-up be required, use only the recommended hydraulic fluid.

6 *Check the controls*

Check the throttle and clutch cables and levers and the gear lever to ensure that they are adjusted correctly, functioning correctly, and that they are securely fastened. If a bolt is going to work loose, or a cable snap, it is better that it is discovered at this stage with the machine at a standstill, rather than when it is being ridden.

7 *Rear suspension settings*

Except for machines with Nivomat rear suspension units, ensure that the spring preload adjusters are at the correct setting for the machine's intended load. On models with two rear suspension units, ensure at all times that both are at the same setting.

8 *Check the tightness of all nuts and bolts*

Using the specified torque settings (where given), check that all fasteners are tightened securely, particularly the wheel spindle nuts and clamp bolts, the rear wheel fasteners (Monolever models) and the stand, footrest, suspension unit and rear subframe mounting bolts or nuts.

Minor service

1 *Change the engine oil and filter*

Oil changes will be much quicker if the machine is first ridden far enough to warm up the engine to normal operating temperature: this will thin the oil and ensure that any particles of dirt or debris will be retained in suspension in the oil and flushed out with it.

Place the machine on its centre stand on level ground, place a container of at least 3 litres (approx 5 Imp pints, 3 US qts) beneath the crankcase. Unscrew the dipstick.

On standard models fitted with BMW crashbars, remove the right-hand crashbar rear mounting, slacken the two front mountings and manoeuvre the bar forwards clear of the filter. Be careful not to burn your hands on the hot exhaust pipe. If an oil cooler is fitted, it is extremely awkward to remove and refit the filter with the exhaust in place; it is advisable to remove the exhaust pipes (taking great care to avoid injury) before draining the oil. Refer to Chapter 4.

On machines fitted with RS or RT fairings only, there should be sufficient room to remove and refit the oil filter with the fairing in place, especially if the hinged type of element is to be used. If BMW crashbars are also fitted, the fairing right-hand lower section should be removed (see Chapter 6) and the crashbar should be moved forwards out of the way, as described above. If an oil cooler is also fitted the exhaust pipes should be removed first, as described in Chapter 4, to make work easier. Take great care to avoid injury when handling the hot exhaust pipes.

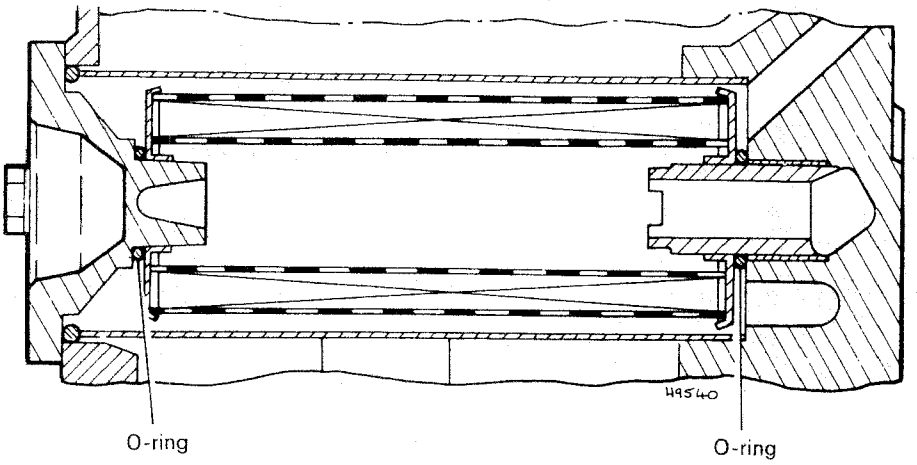

Short rigid element with two separate O-rings. Fitted to all /5, /6, /7 (except those below), R45 and R65 models. Note /7 model and later filter cover shown

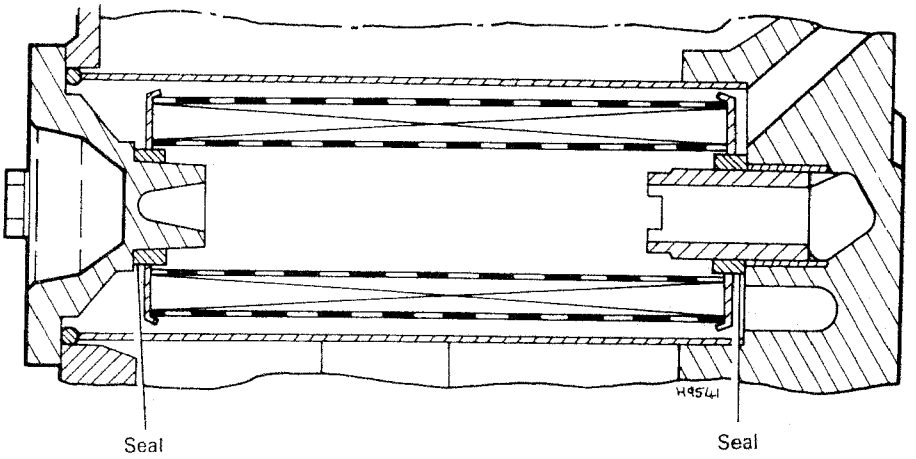

Short rigid element with two square-section seals glued in place, separate O-rings must not be used. Fitted to R80G/S and R80ST but can also be fitted to all /5, /6, /7 (except those below), R45 and R65 models

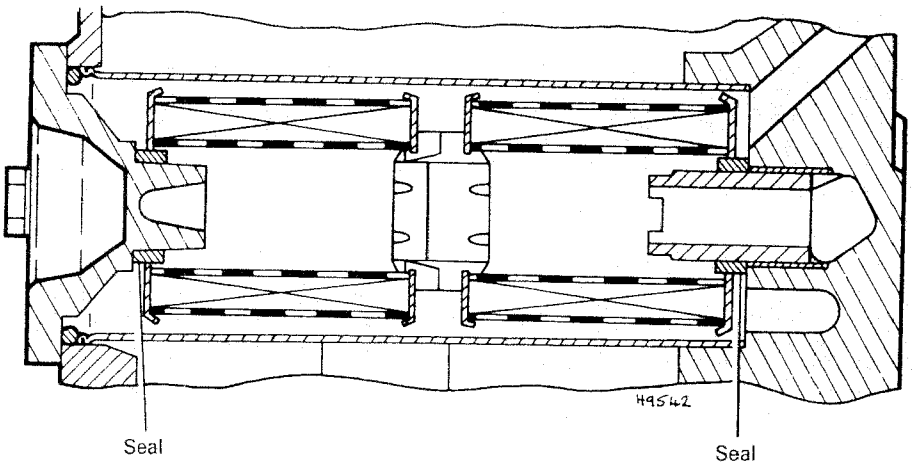

Short hinged element with two square-section seals glued in place, separate O-rings must not be used. Fitted to R100RS and R100RT machines without an oil cooler, R80 and R80RT, but can also be fitted to any standard machine fitted with an RS or RT fairing and no oil cooler

Oil filter types (continued overleaf)