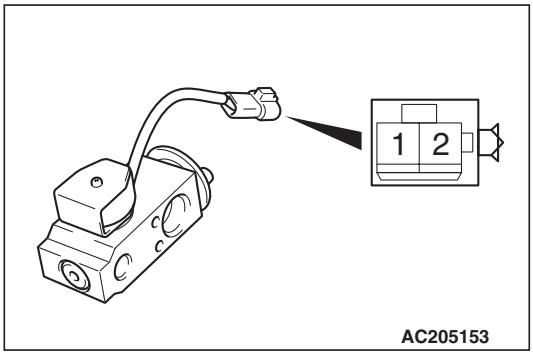

EXPANSION VALVE (MAGNET VALVE) CHECK <VEHICLES WITH REAR A/C SYSTEM>

When battery voltage is applied to the magnetic valve terminal No.1 and No.2 terminal is ground, operating sound should be heard from the magnetic valve.

REAR BLOWER DISASSEMBLY AND ASSEMBLY

M1554010600029

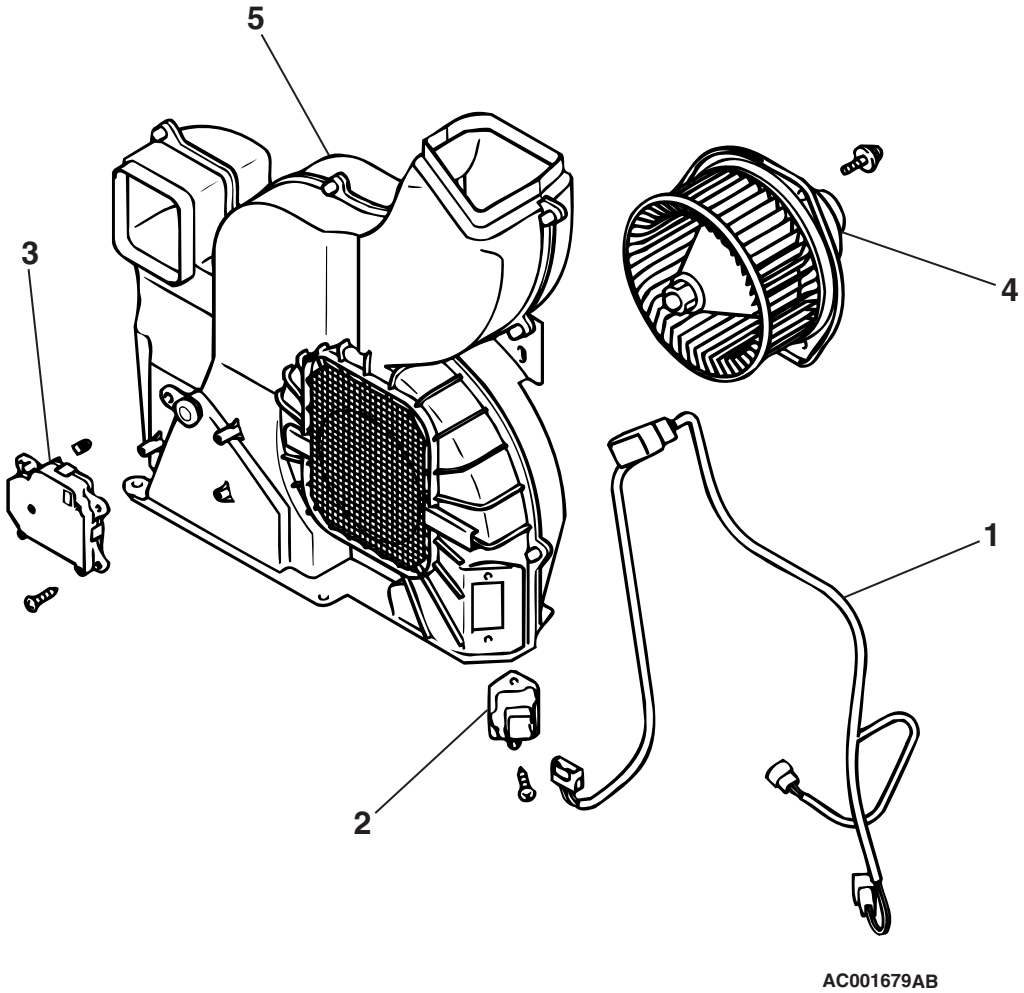

DISASSEMBLY STEPS

1. HARNESS ASSEMBLY
2. RESISTOR
3. AIR OUTLET CHANGEOVER DAMPER MOTOR

DISASSEMBLY STEPS

4. BLOWER MOTOR ASSEMBLY
5. CASE

TSB Revision

INSPECTION

M1554010700060

BLOWER MOTOR CHECK

When battery voltage is applied between the terminals, check that the motor operates. Also, check that there is no abnormal noise.

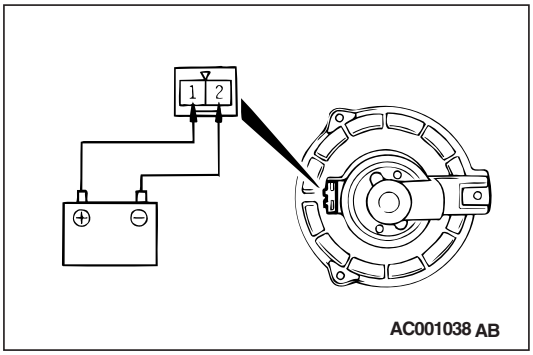

RESISTOR CHECK

Use an ohmmeter to measure the resistance between the terminals. Check that the measured value is at the standard value.

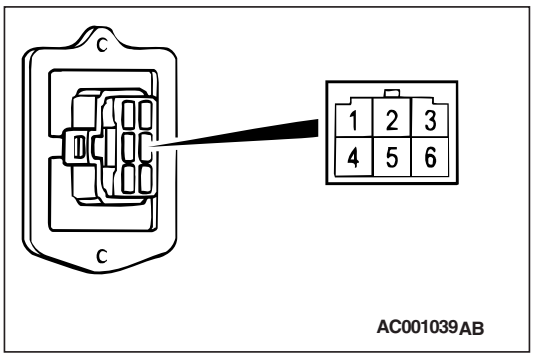

TESTER CONNECTION	STANDARD VALUE Ω
1 – 6	4.9 ± 0.34
1 – 3	2.15 ± 0.15

COMPRESSOR ASSEMBLY

REMOVAL AND INSTALLATION

M1552004400150

Pre-removal Operation	Post-installation Operation
Refrigerant discharging (Refer to P.55A-115).	• Refrigerant charging (Refer to P.55A-115). • Drive Belt Tension Adjustment (Refer to GROUP 00, Maintenance Service – Drive Belts P.00-43).

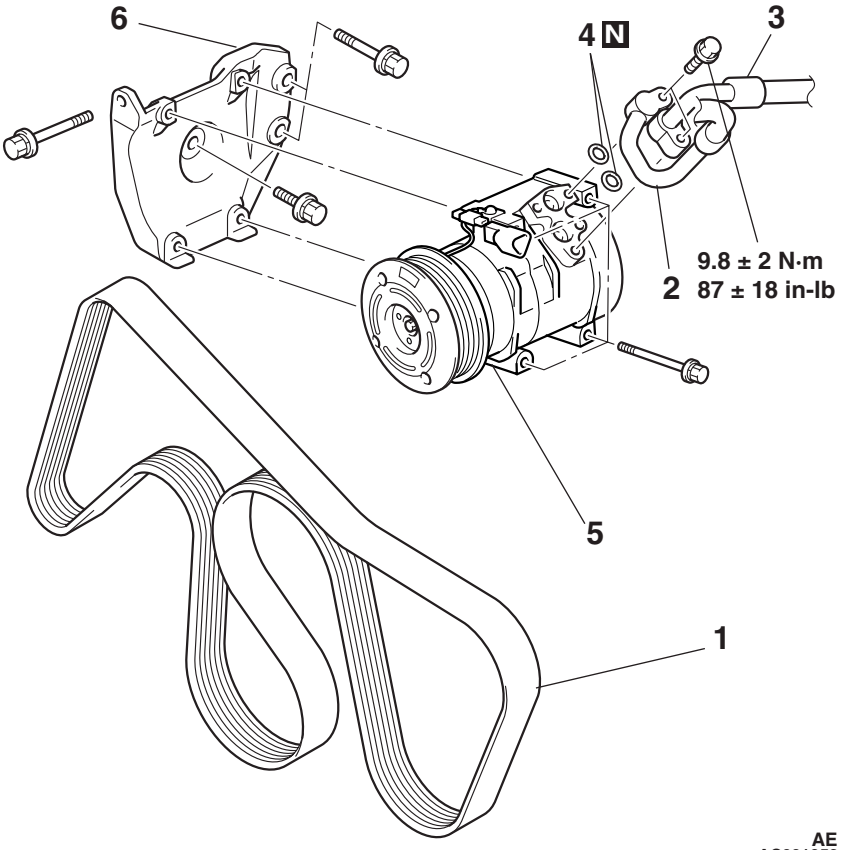

AE
AC001052

REMOVAL STEPS

<<A>> 1. DRIVE BELT
<<B>> 2. DISCHARGE HOSE
<<B>> 3. SUCTION HOSE

REMOVAL STEPS (Continued)

4. O-RING
<<C>> >>A<< 5. COMPRESSOR
6. COMPRESSOR BRACKET

REMOVAL SERVICE POINTS

<<A>> DRIVE BELT REMOVAL

⚠ CAUTION

When reusing the drive belt, mark an arrow which indicates the turning direction (right turn) on the back of the drive belt with a chalk, etc.

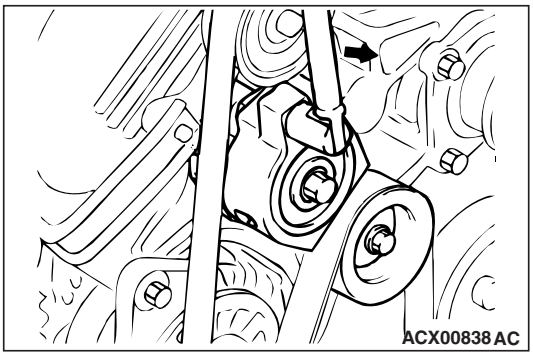

Insert the socket-wrench handle into the tool hole for auto-tensioner and turn it to the arrow direction. Reduce the drive belt tension and remove the drive belt.

<<B>> DISCHARGE HOSE/SUCTION HOSE REMOVAL

⚠ CAUTION

Seal the hoses completely, otherwise the compressor oil and receiver will absorb water vapor easily, possibly damaging the compressor and deteriorating performance.

Plug the disconnected hose and compressor nipple to prevent foreign matter from getting into them.

<<C>> COMPRESSOR REMOVAL

When removing the compressor, be careful not to spill the compressor oil.

INSTALLATION SERVICE POINT

>>A<< COMPRESSOR INSTALLATION

If a new compressor is installed, first adjust the amount of oil according to the procedures described below, and then install the compressor.

1. Measure the amount [X cm^3 (X floz)] of oil within the removed compressor.
2. Drain (from the new compressor) the amount [Y cm^3 (Y floz)] of oil calculated according to the following formula, and then install the new compressor.

<Vehicles without rear cooler or rear A/C>

New compressor oil amount = 120cm^3 (4.2 floz)

<Vehicles with rear cooler or rear A/C>

New compressor oil amount = 140cm^3 (4.9 floz)

<Vehicles without rear cooler or rear A/C>
120 cm^3 – X cm^3 = Y cm^3 (4.2 floz – X floz = Y floz)
<Vehicles with rear cooler or rear A/C>
140 cm^3 – X cm^3 = Y cm^3 (4.9 floz – X floz = Y floz)

NOTE: Y cm^3 (Y floz) indicates the amount of oil in the refrigerant line, the condenser, the evaporator, etc.

NOTE: When replacing the following parts at the same times as the compressor, subtract the rated oil amount of the each part from Y cm^3 (Y floz) and discharge from the new compressor.

Quantity:

- **Evaporator: 60 cm^3 (2.0 floz)**
- **Condenser: 15 cm^3 (0.5 floz)**
- **Suction hose: 10 cm^3 (0.3 floz)**
- **Receiver: 10 cm^3 (0.3 floz)**

INSPECTION

M1552004500191

AIR CONDITIONING COMPRESSOR CLUTCH OPERATION INSPECTION

Connect the positive battery terminal to the air conditioning compressor clutch connector terminal 3, and ground the negative battery terminal to the body of the compressor. The condition is normal if the sound of the a/c compressor clutch (click) can be heard.

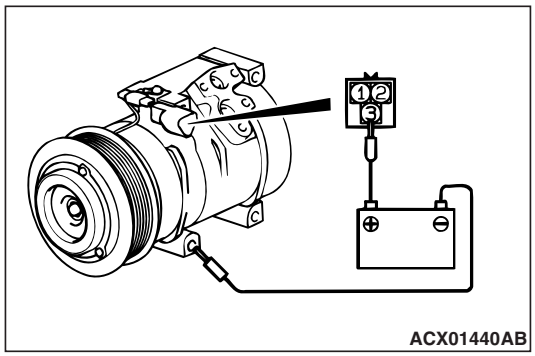

COMPRESSOR

M1552004600284

DISASSEMBLY AND ASSEMBLY

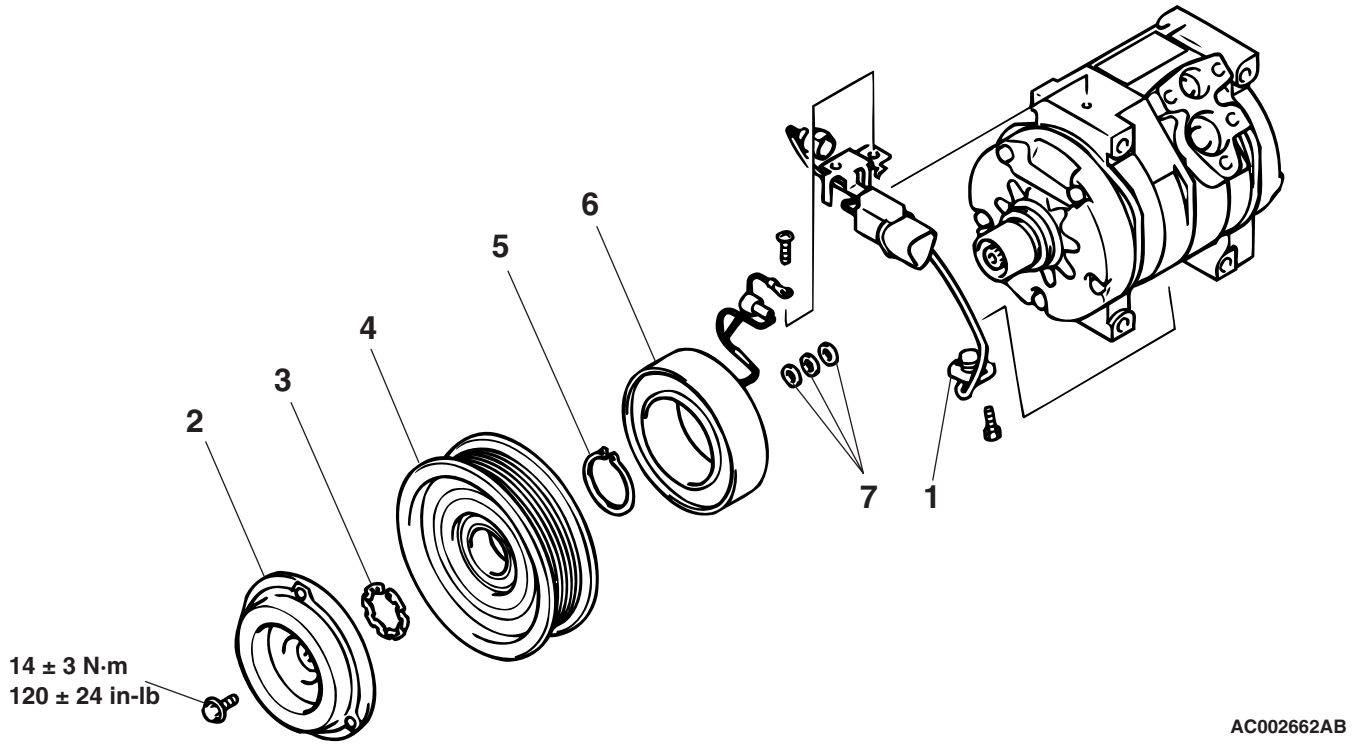

DISASSEMBLY STEPS

- >>**C**<< • AIR GAP ADJUSTMENT
- 1. LOCK SENSOR
- <<**A**>> 2. ARMATURE PLATE
- >>**B**<< 3. SNAP RING

DISASSEMBLY STEPS

- 4. ROTOR
- 5. SNAP RING
- >>**A**<< 6. CLUTCH COIL
- 7. SHIMS

DISASSEMBLY SERVICE POINT

<<A>> ARMATURE PLATE REMOVAL

1. Remove the armature plate mounting nut.
2. Tighten the M10 bolt into the armature plate bolt hole and disconnect the serration of the shaft and the armature plate.

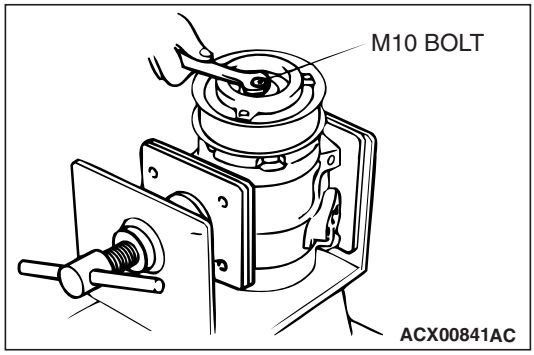

ASSEMBLY SERVICE POINTS

>>A<< CLUTCH COIL INSTALLATION

Install the clutch coil to the compressor, mating the compressor body slot to the clutch coil projection.

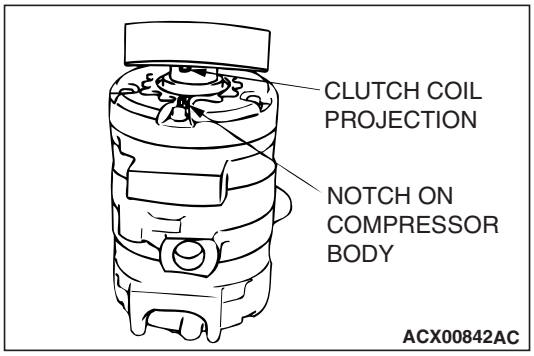

>>B<< SNAP RING INSTALLATION

Install the snap ring taking care not to enlarge the inner diameter too much. When the inner diameter is over 30.5 mm (1.2 inch) resulting from being enlarged too much, replace the snap ring with a new one.

>>C<< AIR GAP ADJUSTMENT

Check whether or not the air gap of the clutch is within the standard value.

Standard value: 0.35 – 0.65 mm (0.014 – 0.026 inch)
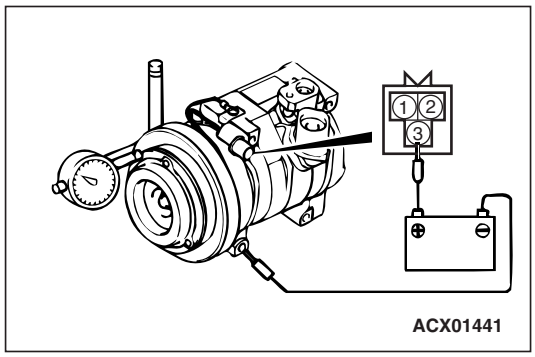
NOTE: If there is a deviation of the air gap from the standard value, make the necessary adjustment by adjusting the number of shims.