To check the timing mark of the fuel injection pump **Operation 8-12**

Special requirements

Special tools			
Description	**Part number**	**Description**	**Part number**
Universal timing tool	MS.67B	Gear adaptor for use with MS.67B	PD.67-3

1 Remove the fuel injection pump from the engine, see Operation 11-14.

2 Fit the adaptor PD.67-3 (A) to the drive shaft of the fuel pump and fasten it with the nut of the fuel pump gear.

3 Connect number 1 outlet (B1) to an atomiser tester. Operate the hand pump until a pressure of not more than 50 atm (735 lbf in^2) 52 kgf/cm^2 is indicated on the gauge.

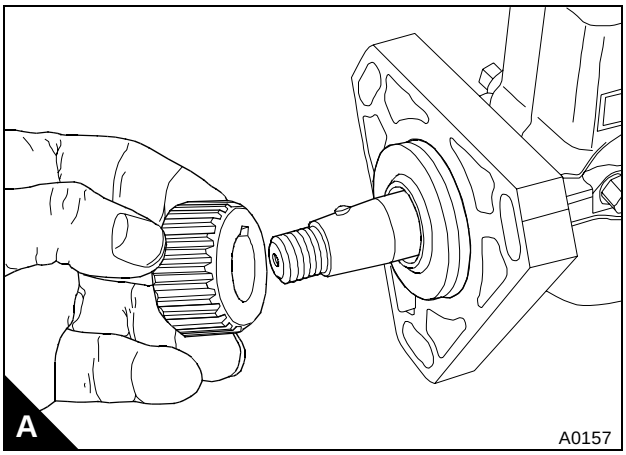

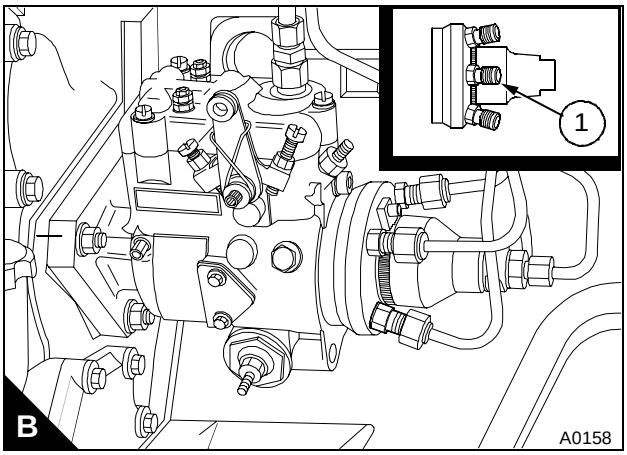

4 Rotate the drive shaft of the fuel pump clockwise from the drive end of the pump until the pin in the shaft aligns with number 1 outlet. Loosen the screw (C3) on the timing tool MS.67B and set the timing tool to the correct pump mark angle, see "Static timing - Stanadyne fuel injection pump" on page 24. Tighten the screw.

5 Put the sleeve (C1) for the timing tool in position on the fuel pump. Fit the timing tool to the adaptor on the fuel pump drive shaft. Rotate the shaft backwards and forwards until the fuel pressure prevents movement of the shaft. This is necessary as fuel must pass the delivery valve in the fuel pump before the fuel pressure will prevent movement of the shaft. In this position, the fuel pump is set at the start of injection from number 1 outlet.

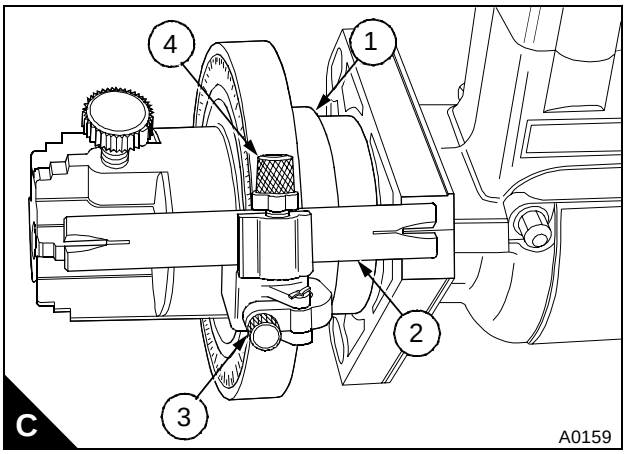

Continued

6 Loosen the screw (D4). Slide the pointer (D2) forward until it is over the centre of the pump flange and check that the mark on the flange is in the centre of the slot in the pointer.

7 If the mark on the flange is not correct, remove the timing tool and eliminate the mark. Fit the timing tool and ensure that the fuel pump is at the start of injection for number 1 cylinder. Loosen the screw (D4). Slide the pointer forward to the complete width of the flange and tighten the screw. Make a new mark on the flange of the pump through the slot in the pointer.

8 Remove the timing tool, the sleeve and the adaptor.

9 Disconnect the atomiser tester from number 1 high-pressure outlet.

10 Fit the fuel injection pump, see Operation 11-15.

11 Eliminate air from the fuel system, see Operation 11-17.

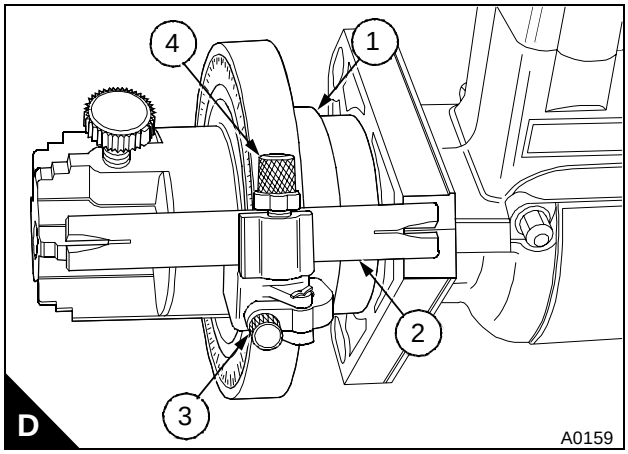

To check the engine timing mark **Operation 8-13**

Special requirements

Special tools			
Description	**Part number**	**Description**	**Part number**
Universal timing tool	MS.67B	Adaptor for use with MS.67B	PD.67-2
Pointer for use with MS.67B	PD.67-4		

1 Set the piston of number 1 cylinder to TDC on the compression stroke.

2 Remove the fuel injection pump and its joint from the pump flange, see Operation 11-14.

3 Align the key in the adaptor PD.67-2 (A) with the keyway in the gear of the fuel injection pump and fit the adaptor to the gear. Ensure that the adaptor is against the rear face of the timing case. Secure the adaptor to the gear with the nut supplied with the adaptor.

4 Loosen the screw (B4) on the timing tool MS.67B. Set the timing tool to the correct engine check angle, see "Static timing - Stanadyne fuel injection pump" on page 24, and tighten the screw. Loosen the screw (B5) and fit the splined shaft (B3) into the timing tool (B). Loosen the screw (B2). Fit the 90° pointer PD.67-4 (B3) and tighten the screw.

5 Fit the splined shaft (B3) of the timing tool to the adaptor. Slide the timing tool along the splined shaft until it is against the adaptor and tighten the screw (B5).

6 Loosen the lock screw (B2). Slide the pointer forward until the flat face is against the rear face of the timing case and tighten the screw. Rotate the timing tool clockwise, as seen from the rear of the engine, to remove the backlash. If the mark on the timing case is correct, the mark will align with the top edge of the pointer (B1). If the mark is not correct, remove the timing tool and eliminate the mark on the timing case. Fit the timing tool. Ensure that the pointer is against the timing case and make a new mark on the timing case along the top straight edge of the pointer.

7 Remove the timing tool and the adaptor.

8 Fit a new joint to the fuel injection pump flange and fit the pump, see Operation 11-15.

9 Remove the dial gauge from the inlet valve of the number 1 cylinder and fit the valve springs and the rocker lever. Set the valve tip clearance of number 1 cylinder inlet valve to 0,20 mm (0.008 in).

10 Fit the rocker cover, see Operation 3-1.

11 Eliminate air from the fuel system, see Operation 11-17.

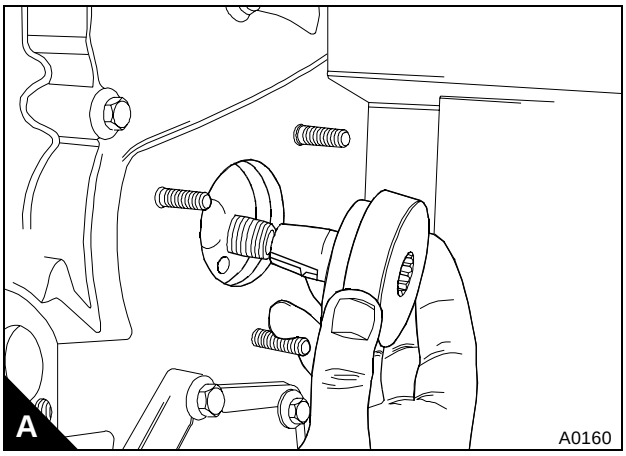

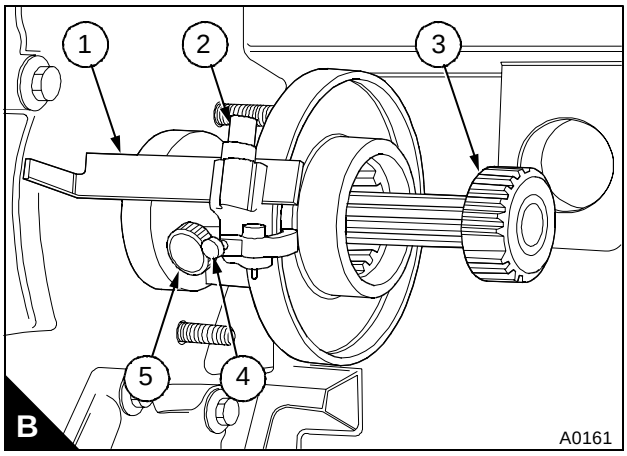

9

Aspiration system

Open engine breather

An open breather is fitted to the engine which has a pipe connected to the rocker cover, crankcase emissions pass directly from the engine.

Ensure that the breather pipe is not restricted.

This page is intentionally blank

10

Lubrication system

General description

Pressure lubrication is supplied by a rotor type pump which is driven through an idler gear from the crankshaft gear. The pump has an inner rotor and an outer rotor which are off-centre to each other. There is a key between the inner rotor and the drive shaft. The inner rotor has six lobes which mesh with the seven lobes of the outer rotor. When the pump rotates, the space between the lobes of the outer rotor which are in mesh increases to cause a suction or decreases to cause a pressure increase. If a balancer unit is fitted, the oil pump is fitted to the balancer frame and is driven by the balancer drive shaft. Refer to "Lubrication system flow diagram for the relief valve and balancer" on page 133.

Lubricating oil (page 132/A1) from the sump passes through a strainer and pipe to the suction side of the pump.

The lubricating oil (page 132/A2) passes from the outlet side of the pump through a pipe to a relief valve, which is fitted to the bottom of the left side of the cylinder block.

If a balancer unit is fitted, the relief valve is fitted in the frame of the balancer. The relief valves opens if the oil pressure is too high; this allows some of the lubricating oil to return to the sump.

From the relief valve, lubricating oil passes to a plate type oil cooler (if one is fitted). The oil cooler is fitted to the oil filter head and has ten plates. Lubricating oil from the oil cooler, passes to an oil filter. The oil filter can be fitted to the left or right side of the engine. If the filter is fitted to the right side of the engine, the oil passes through a pipe connected between the relief valve and the right side of the cylinder block. Refer to "Lubrication system flow diagram for the relief valve and balancer" on page 133. The oil passes from the pipe through a passage in the right side of the cylinder block to an oil cooler and then to the oil filter.

The lubricating oil passes from the filter to the pressure rail which is drilled the complete length of the left side of the cylinder block. If the oil filter is on the right side of the engine, the oil passes through a passage drilled across the cylinder block to the pressure rail.

From the pressure rail, lubricating oil passes to the main bearings of the crankshaft and through passages in the crankshaft to the big end bearings. The pistons and the cylinder bores are lubricated by splash and oil mist.

Lubricating oil (page 132/A3) passes from the main bearings through passages in the cylinder block to the journals of the camshaft. Lubricating oil passes from the centre journal of the camshaft through a passage in the cylinder block and cylinder head to a restriction in the pedestal of the rocker shaft, at a reduced pressure (page 132/A4), to the rocker bushes.

The oil passes through a passage in the rocker shaft to the bearings of the rocker levers. The valve stems, valve springs and the tappets are lubricated by splash and oil mist.

The hub of the idler gear is lubricated by oil from the pressure rail and the timing gears are splash lubricated.

Lubrication system flow diagram

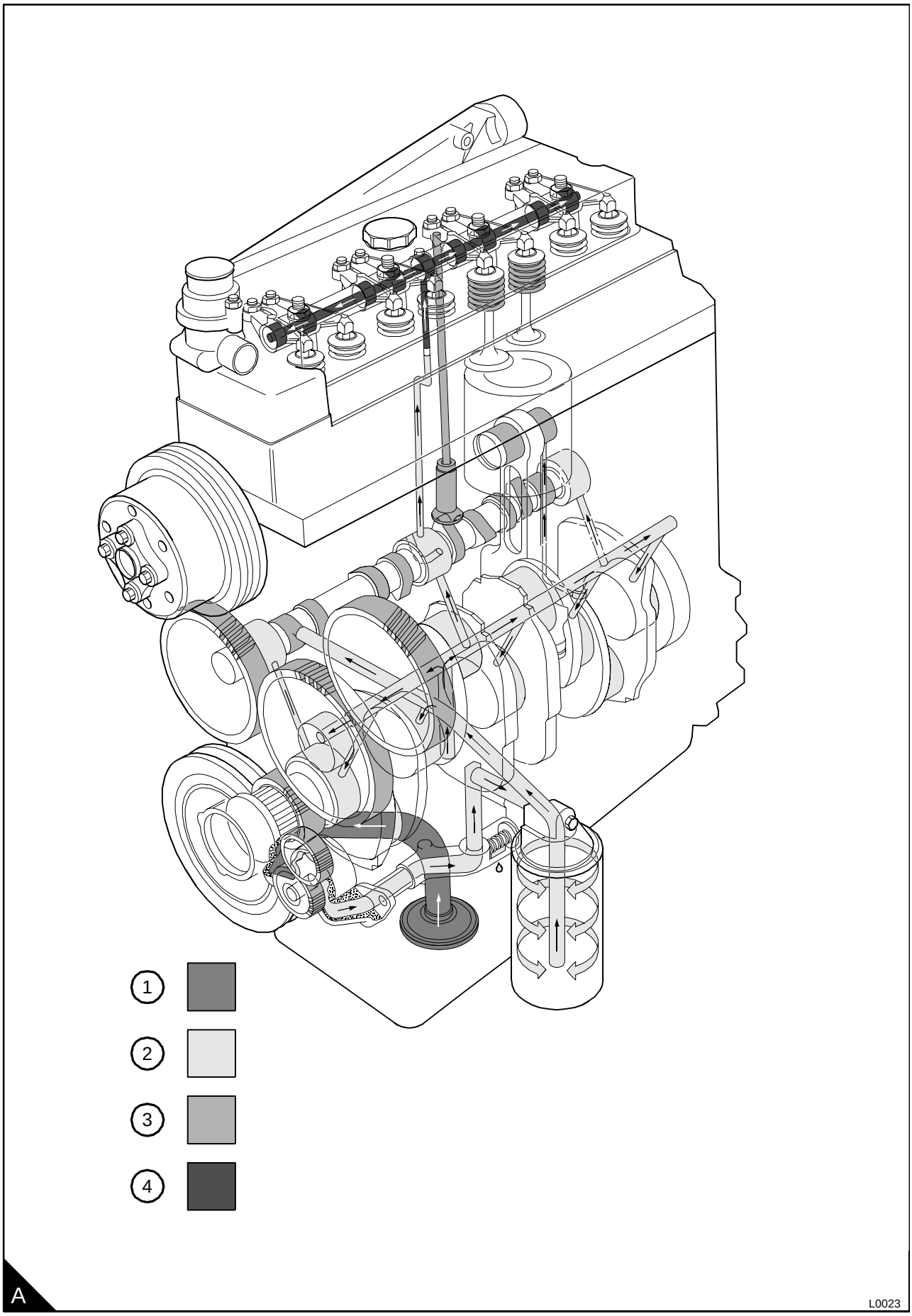

Lubrication system flow diagram for the relief valve and balancer

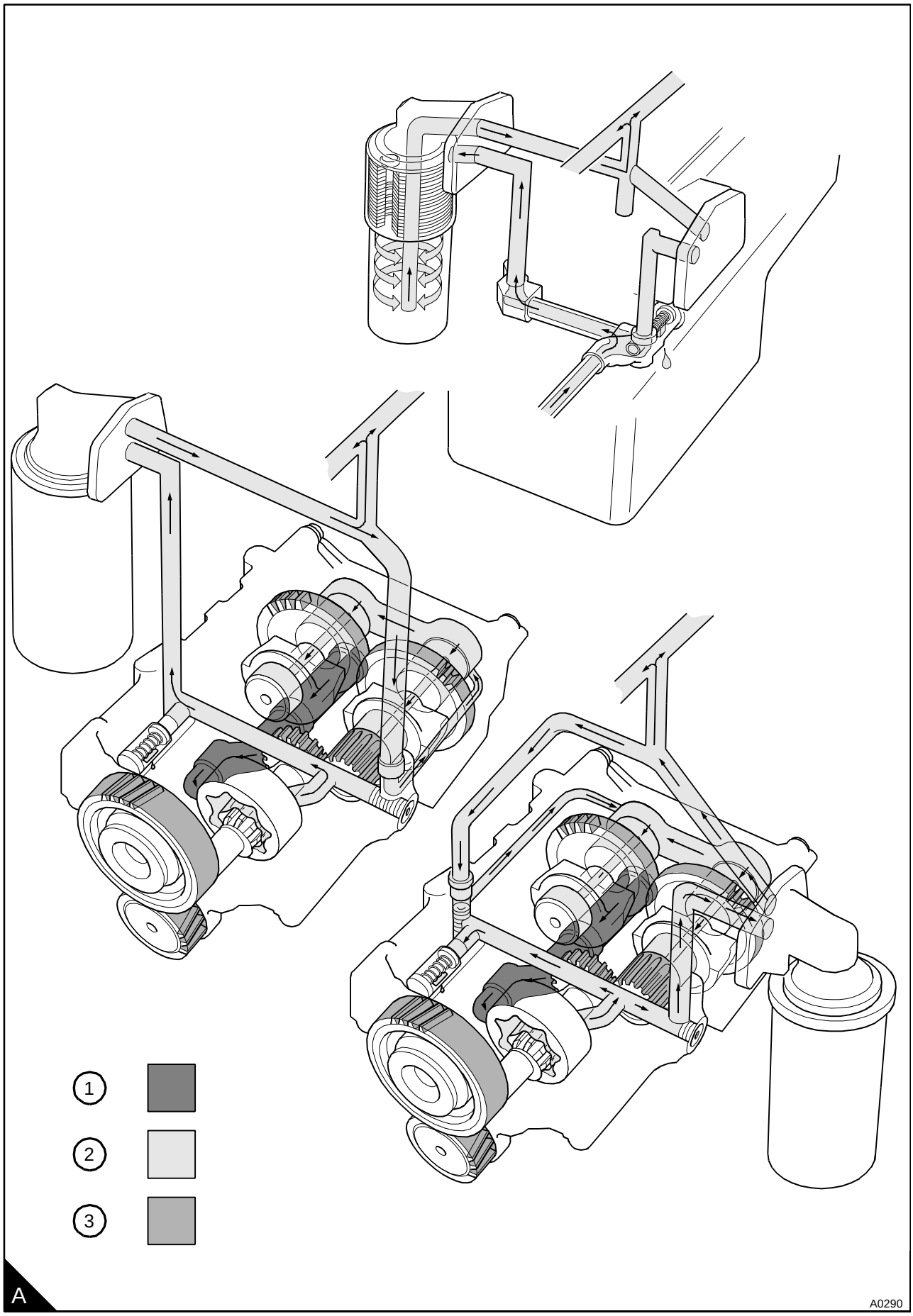

Filter canister

To renew **Operation 10-1**

1 Put a tray under the filter to retain spilt lubricating oil.

2 Remove the filter canister with a strap wrench or similar tool. Ensure that the adaptor (A1) is secure in the filter head. Discard the canister.

3 Clean the filter head.

4 Lubricate the top of the canister seal (A2) with clean engine lubricating oil.

5 Fit the new canister and tighten it by hand only. Do not use a strap wrench.

6 Ensure that there is lubricating oil in the sump. Ensure that the engine will not start and operate the starter motor until the oil pressure is obtained. To ensure that the engine will not start, either put the manual control in the "stop" position or disconnect the electrical stop control of the fuel injection pump. Operate the starter motor until the oil pressure warning light is extinguished or there is a reading on the gauge.

7 Operate the engine and check for leakage from the filter. When the engine has cooled, check the oil level on the dipstick and put more oil into the sump, if necessary.

Caution: *The canister contains a valve and special tube to ensure that lubricating oil does not drain from the filter. Therefore, ensure that the correct Perkins POWERPART canister is used.*

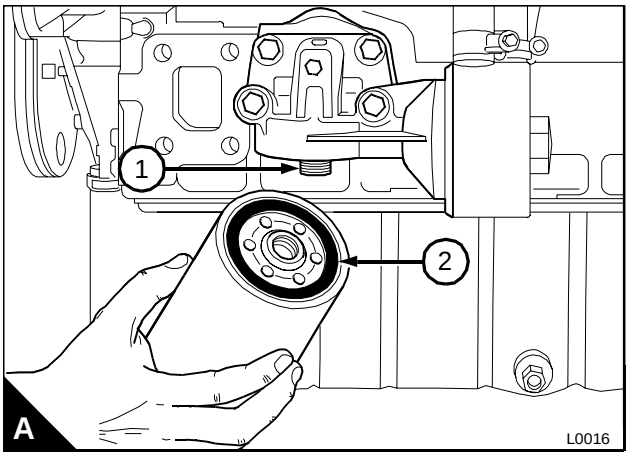

To remove and to fit **Operation 10-2**

Special requirements

Consumable products	
Description	**Part number**
POWERPART Nutlock	21820242

1 Put a tray under the filter head to contain spilt lubricating oil.

2 Remove the filter canister, see Operation 10-1.

3 Remove the oil cooler from the filter head, if one is fitted, see Operation 12-8.

4 Release the setscrews and remove the filter head (A4) from the cylinder block. Discard the joint (A3).

5 Clean the joint face of the filter head (A5) and the flange of the oil cooler, If one is fitted. Fit the filter head and a new joint.

Note: Some engines have an adaptor (A1) between the cylinder block and the filter head. If an adaptor is used, two joints are fitted (A2) and (A3).

Apply POWERPART Nutlock to the first three threads of the setscrews and tighten the setscrews.

6 Fit the oil cooler to the filter head, if one is fitted, see Operation 12-8.

7 Fit new filter canister, see Operation 10-1.

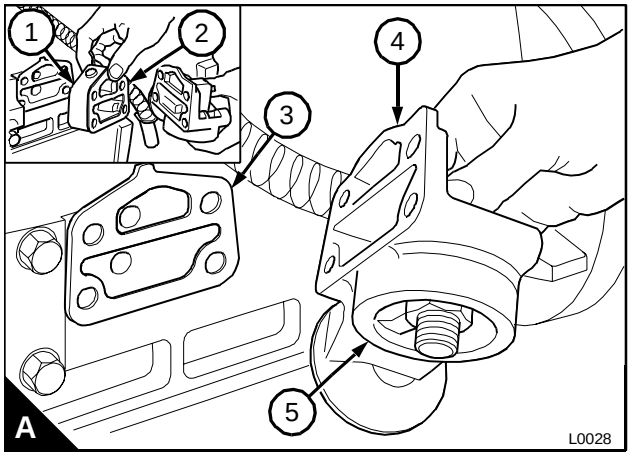

To remove and to fit — Operation 10-3

1 Operate the engine until it is warm.

2 Stop the engine, remove the sump drain plug and its "O" ring and drain the oil. where necessary, remove the dipstick and the dipstick tube.

3 Provide a support for the sump and remove the setscrews and the two nuts which fasten the sump to the cylinder block and to the timing case. lower the sump and remove the joint.

4 Wash the sump with an approved cleaning fluid, ensure all the cleaning fluid is removed. clean the flange face of the sump and of the cylinder block. if necessary, renew the felt dust seal which is fitted to the rear of the sump flange on some engines.

5 Fit the sump together with a new joint and ensure the correct location with a setscrew on each side. fit the remainder of the setscrews and the nuts and tighten all the fasteners to 22 Nm (16 lbf ft) 2,2 kgf m. fit the drain plug together with a new "O" ring and tighten the plug to 34 nm (25 lbf ft) 3,5 kgf m. where necessary, fit the dipstick tube and the dipstick. Fill the sump to the "max" level on the dipstick with an approved lubricating oil.

Oil strainer and suction pipe

To remove and to fit **Operation 10-4**

The oil strainer is an integral part of the suction pipe. No regular service is necessary but wash the strainer when it is removed.

When a balancer is fitted, the suction pipe is normally a short pipe which is fastened to the balancer frame and a pipe bracket is not fitted. The short oil strainer and suction pipe are made of a composite material. This arrangement has an "O" ring seal on the flange face of the oil pump instead of a joint.

1 Remove the sump, see Operation 10-3.

2 Release the setscrew which holds the bracket to the main bearing cap (A2).

3 Release the setscrews from the flange of the suction pipe (A1). Remove the suction pipe and strainer. Remove and the old joint or the "O" ring. Clean the flange face of the oil pump and of the suction pipe.

4 Loosely assemble the bracket of the suction pipe to the correct main bearing cap. Fit the suction pipe to the oil pump together with a new joint or an "O" ring. Tighten the setscrews. Tighten the setscrew of the suction pipe bracket. Ensure that there is no stress on the suction pipe.

5 Fit the sump, see Operation 10-3, and fill it with an approved oil to the correct level on the dipstick, refer to the User's Handbook.

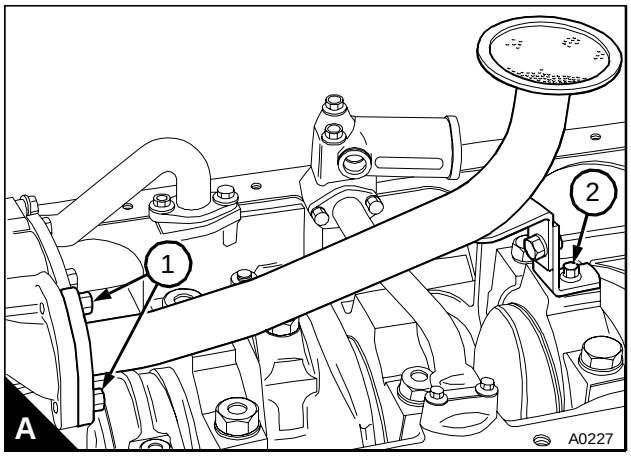

To inspect and to correct **Operation 10-5**

1 Wash the assembly in an approved cleaning fluid and dry it thoroughly.

2 Check the pipe, the strainer and the welded joints for cracks and other damage. Check that the mounting bracket is secure.

3 If the damaged component cannot be welded correctly, renew the assembly.

4 Composite material parts must be renewed if they have cracks or damage.