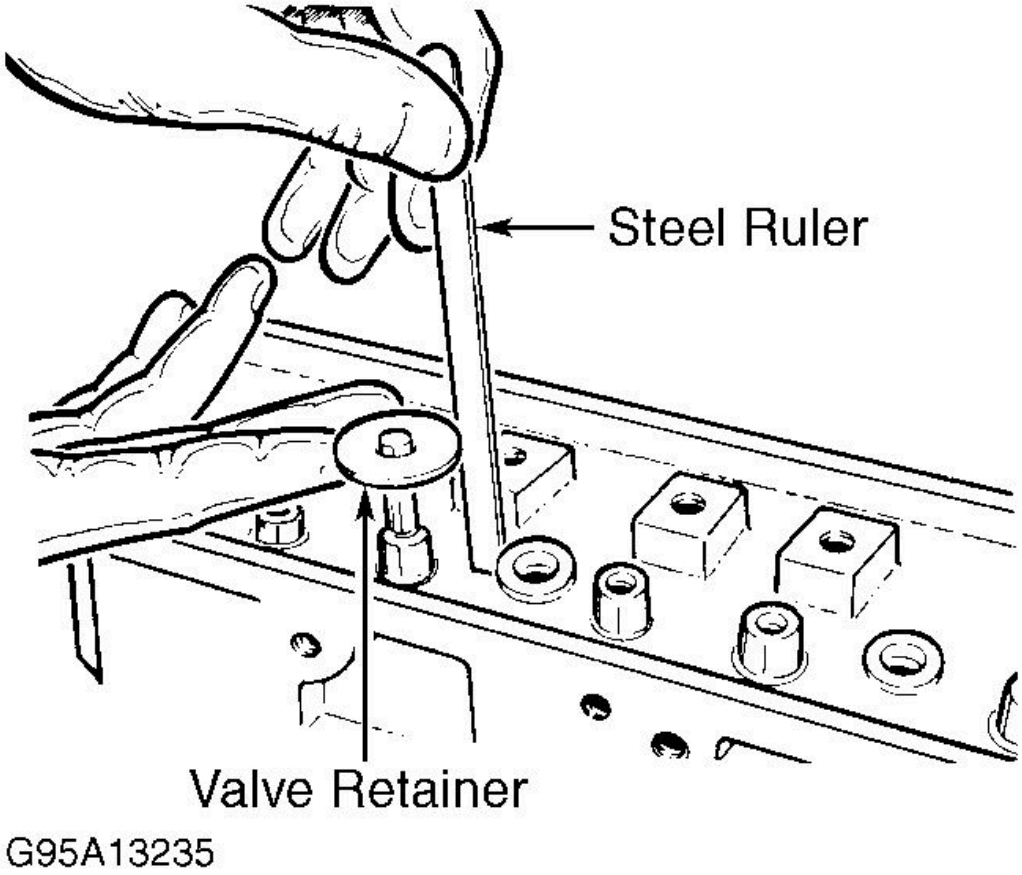


**Fig. 17: Measuring Valve Spring Installed Height**
**Courtesy of GENERAL MOTORS CORP.**

**CYLINDER BLOCK ASSEMBLY**

**Cylinder Block**

Using feeler gauge and straightedge, inspect deck surface for warpage. Replace cylinder block if more than .010" (.25 mm) material is removed from deck surface.

**Cylinder Block Flange Runout**

1. With engine removed and crankshaft installed, measure cylinder block flange runout. Mount dial indicator gauge plate flat against crankshaft flange. Place

dial indicator stem on lower left transmission bolt boss (flat area around bolt hole). Adjust dial indicator to zero.

2. Observe and record readings obtained on all bolt hole bosses. Measurements should not vary more than .010" (.25 mm). If readings exceed specification, check crankshaft flange runout. See **CRANKSHAFT FLANGE RUNOUT**.

**Piston Ring Installation**

Install piston rings with identification mark toward top of piston, and ring gaps properly spaced. See **Fig. 20**.

**Piston & Rod Assembly**

Piston can be installed on connecting rod in either direction. Install piston and connecting rod onto crankshaft, with arrow on top of piston and/or ridge(s) on bottom of pin boss facing toward front of engine.

**Fitting Pistons**

**NOTE: DO NOT machine oversize pistons, or engine balance will be affected.**

Piston diameter should be measured 1.73" (44 mm) from top of piston.

**Crankshaft & Main Bearings**

1. Main bearing caps are a press fit. All main caps incorporate side bolts except the rear. Remove side bolts. Remove main cap bolts. Using Slide Hammer (J-6125-B) and Main Bearing Cap Puller (J-41348), carefully remove caps for service.
2. Install the upper crankshaft main bearings.
3. Install the crankshaft. Lubricate the crankshaft to crankshaft main bearing contact areas with engine oil or engine assembly lubricant.

**NOTE: In order to prevent the possibility of cylinder block or crankshaft bearing cap damage, the crankshaft bearing caps are tapped into the cylinder block cavity using a brass, lead, or a leather mallet before the attaching**

**bolts are installed. Do not use attaching bolts to pull the crankshaft bearing caps into the seats. Failure to use this process may damage a cylinder block or a bearing cap.**

4. Install the lower crankshaft main bearings into the main bearing caps.

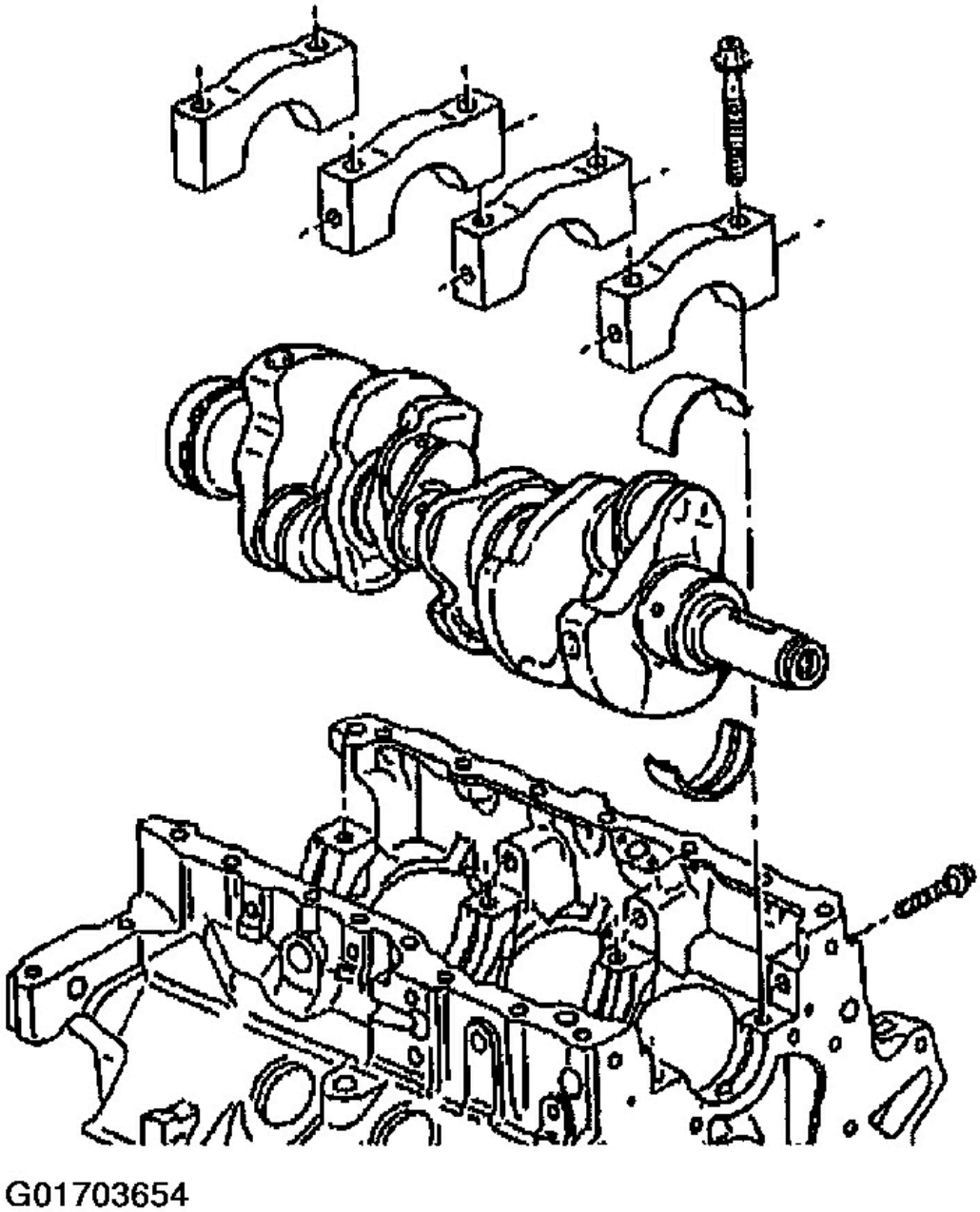


**Fig. 18: Crankshaft, Upper & Lower Crankshaft Main Bearings**
**Courtesy of GENERAL MOTORS CORP.**

5. Install the crankshaft main bearing cap bolts. Start the crankshaft main bearing

cap bolts by hand. Ensure the bottom of the crankshaft main bearing cap is parallel to the bottom of the channel.

**Tighten**

- Tighten the crankshaft main bearing cap bolts in equal increments. Do not completely tighten one bolt at a time to prevent the cap from being cocked.
- Tighten the bolts to 70 N.m (52 lb ft) to fully seat the crankshaft main bearing caps. Loosen the bolts 360 degrees counterclockwise.
- Tighten the bolts to 20 N.m (15 lb ft), then 40 N.m (30 lb ft).
- Use *J 36660-A* to tighten the bolts in steps: 35 degrees + 35 degrees + 40 degrees for a total of 110 degrees.

6. Install the side main bolts. Apply GM P/N United States 12345493, GM P/N Canada 10953488 or the equivalent to the side main bolts.

**Tighten**

Tighten the side crankshaft main bearing cap bolts to 15 N.m (11 lb ft). Use *J 36660-A* to tighten the bolts an additional 45 degrees.

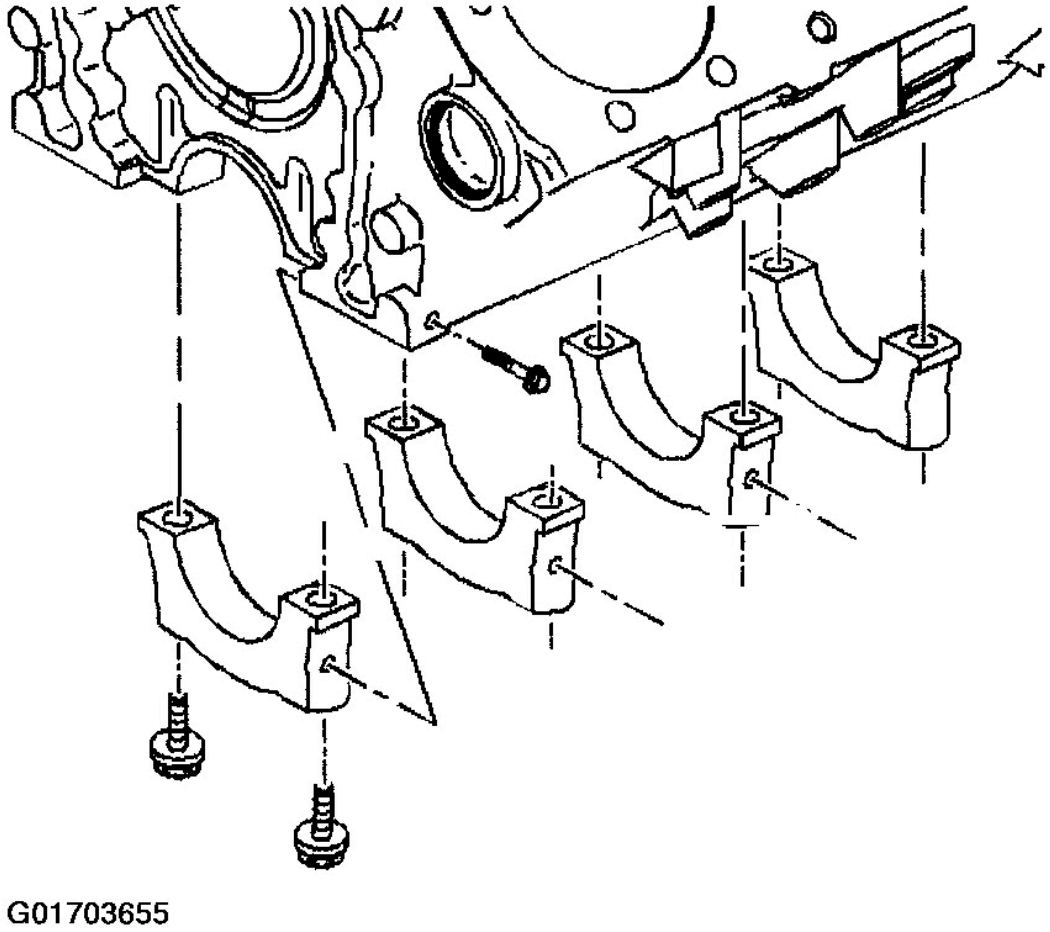


**Fig. 19: Install Side Main Bolts**
**Courtesy of GENERAL MOTORS CORP.**

**Rod Bearings**

1. Ensure bearing cap bolt holes and mating surfaces are clean and dry. Use connecting rod stud protector on rod cap bolts. Install bearing inserts in connecting rod and cap. Lubricate bearings and crank pin.
2. Replace both upper and lower bearings as a set. Install bearing cap. Tighten NEW rod bearing cap bolts to 20 ft. lbs. (27 N.m). Tighten bolts an additional 50 degrees using Torque Angle Meter (J-36660).

**Crankshaft Flange Runout**

1. With engine removed and crankshaft installed, or with crankshaft mounted on "V" blocks, measure crankshaft flange runout. Mount dial indicator and place dial indicator stem on crankshaft flange. Adjust dial indicator to zero.
2. Mark reference point on crankshaft flange. Ensure crankshaft is thrust forward so end float will not affect readings. Turn crankshaft 360 degrees.
3. Observe and record readings. Reading should not vary more than .002" (.05 mm). Replace crankshaft if runout exceeds specification.

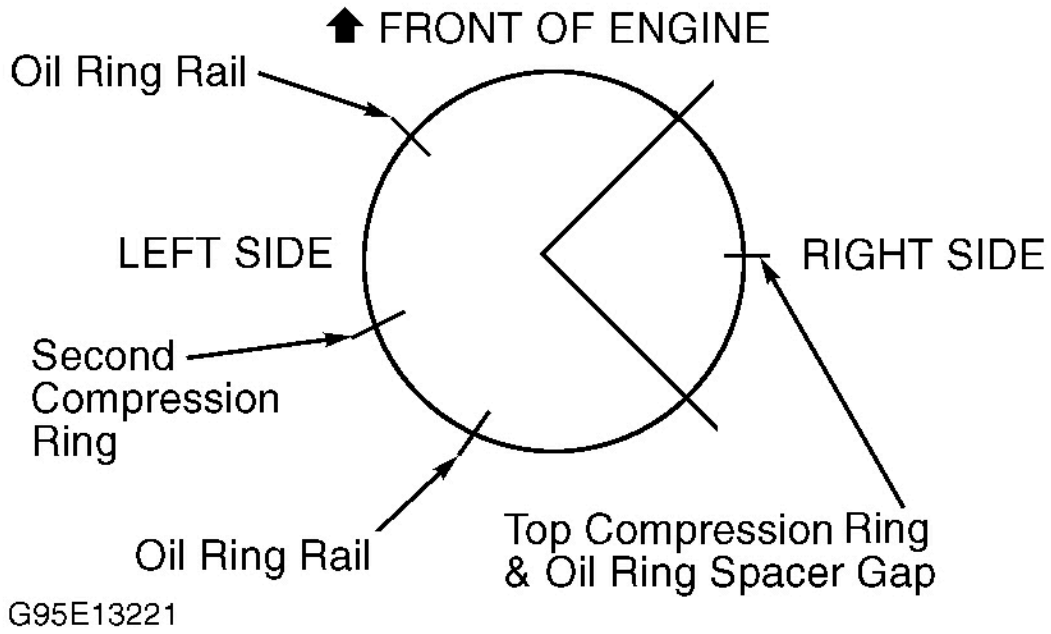


**Fig. 20: Positioning Piston Ring Gaps**
**Courtesy of GENERAL MOTORS CORP.**

## ENGINE OILING

### LUBRICATION SYSTEM

The crankshaft driven, gear-type oil pump provides pressurized lubrication to the main gallery. See **Fig. 21**. Oil pump and pressure regulator valve are located in front cover.

**Crankcase Capacity**

Engine oil capacity is approximately 4 qts. (3.7L) without filter change. After changing filter, recheck oil level and add oil as necessary.

**Normal Oil Pressure**

With engine at normal operating temperature, oil pressure (with 5W-30 or 10W-30 engine oil) should be 60 psi (4.2 kg/cm$^2$ ) at 1850 RPM.

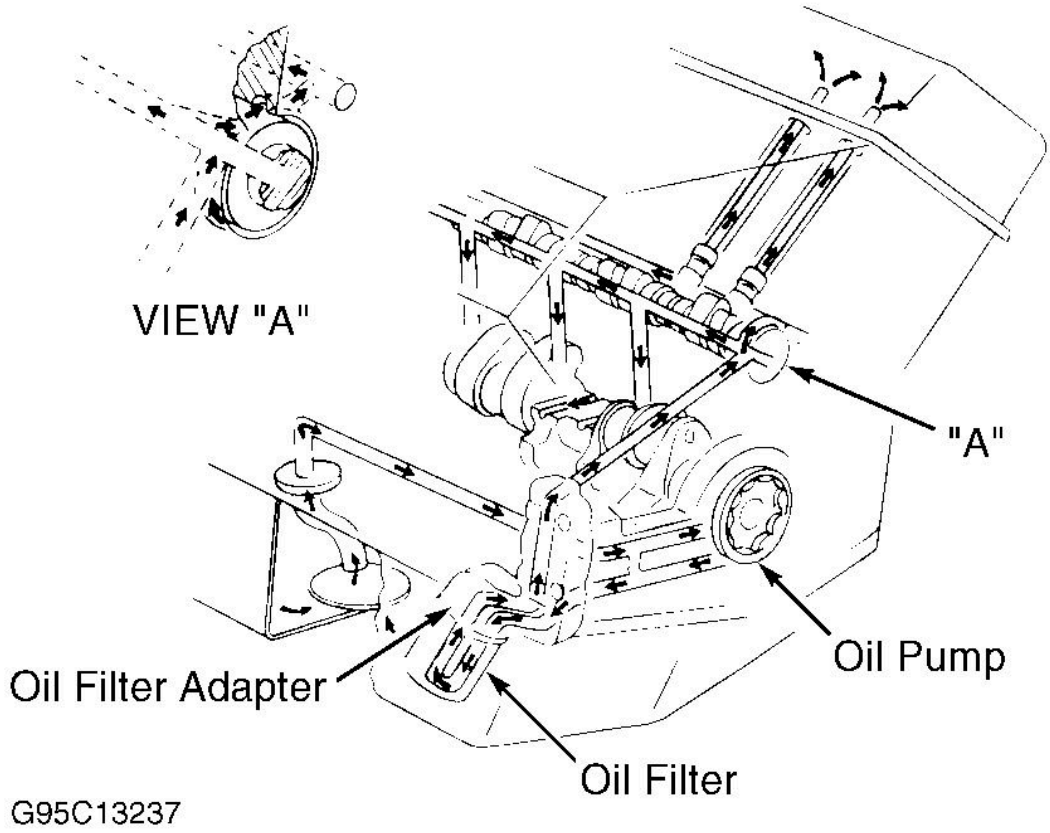


**Fig. 21: Cross-Sectional View Of Engine Oiling System**
**Courtesy of GENERAL MOTORS CORP.**

**OIL PUMP**

**Removal & Disassembly**