9. Mount outer and inner discs in alternating order starting with an inner disc.

NOTE: *The installation clearance of internal parts is corrected by mounting outer discs of different thicknesses.*

NOTE: *The difference in thickness between the left and right disc package must be less than* ***0.1 mm*** *(****0.004 in****).*

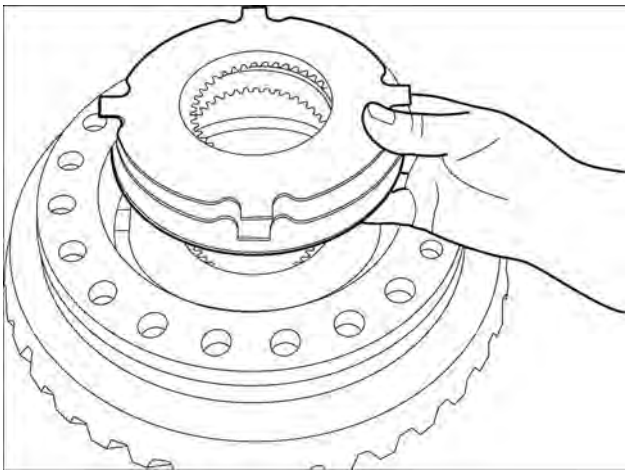

RAIL11WEL0308BA 9

10. Determine the installation clearance **0.2 - 0.7 mm** (**0.008 - 0.028 in**). Measure Dimension I from the mounting face of the differential housing to the plane face of the outer disc. Dimension I e.g. **44.30 mm** (**1.744 in**).

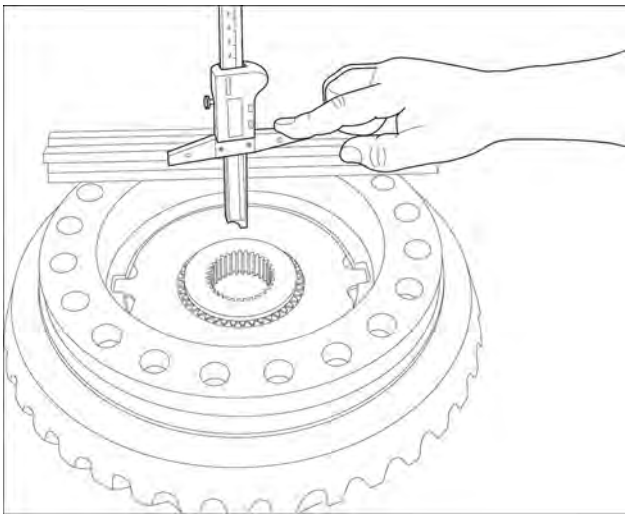

RAIL11WEL0309BA 10

11. Measure Dimension II, from the contact face of the outer disc to the mounting face on the housing cover. Dimension II e.g. 43.95 mm (1.730 in.)

NOTE: *Any deviation from the required installation clearance must be corrected with corresponding outer discs: s =* ***2.7 mm*** *(****0.106 in****), s =* ***2.9 mm*** *(****0.114 in****), s =* ***3.0 mm*** *(****0.118 in****), s =* ***3.1 mm*** *(****0.122 in****), s =* ***3.2 mm*** *(****0.126 in****), s =* ***3.3 mm*** *(****0.130 in****), s =* ***3.5 mm*** *(****0.138 in****)).*

NOTE: *Make sure the difference in thickness between the left and right disc package is less than* ***0.1 mm*** *(****0.004 in****).*

Calculation Example:	
Dimension I	44.30 mm (1.744 in.)
Dimension II	43.95 mm (1.730 in.)
Difference + disc clearance	0.35 mm (0.013 in.)

12. Secure thrust washers into housing cover with grease.

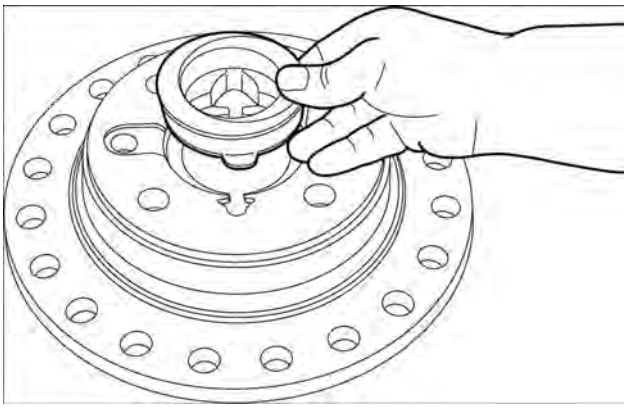

RAIL11WEL0311BA 11

13. Mount two M16 x 1.5 adjusting bolts and insert housing cover until contact with differential housing is made. Preload differential with a press. Secure with new locking bolts and torque to **400 N·m** (**295 lb ft**).

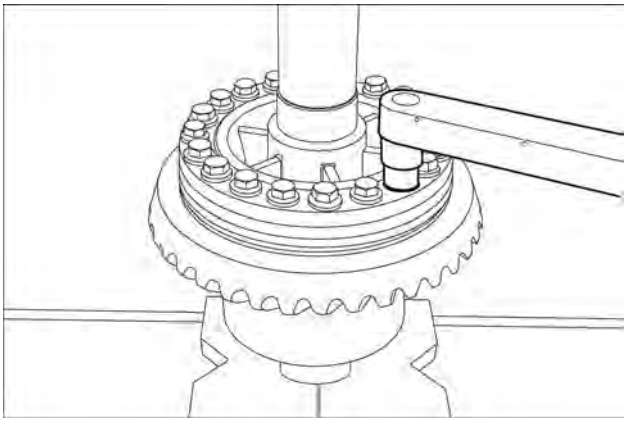

RAIL11WEL0312BA 12

14. Heat both tapered roller bearings and insert until contact is made. Adjust tapered roller bearing after cooling down.

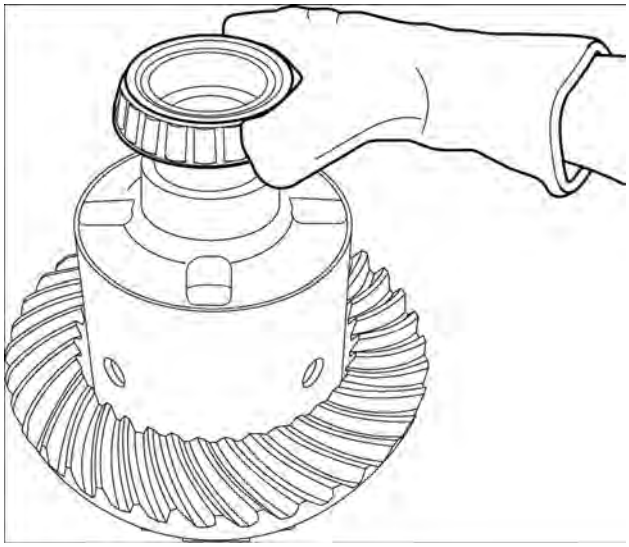

RAIL11WEL0269BA 13

Next operation:
Bevel gear set and differential carrier - Backlash — Models MT-L 3085 II / MT–L 3095 II (25.102)

Differential lock - Disassemble - DHL-1200

621F

Prior operation:
Differential - Remove — Models MT-L 3065 II / MT-L 3075 II (25.102)

1. Pull both tapered roller bearings from the differential.

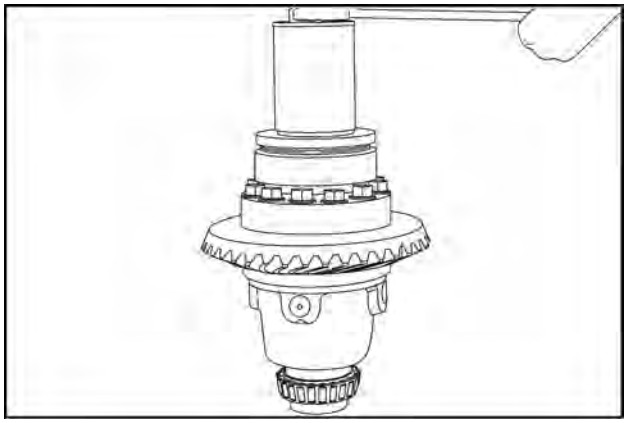

RAIL11WEL0036BA 1

2. Preload the differential using a press and loosen the hexagon bolts.

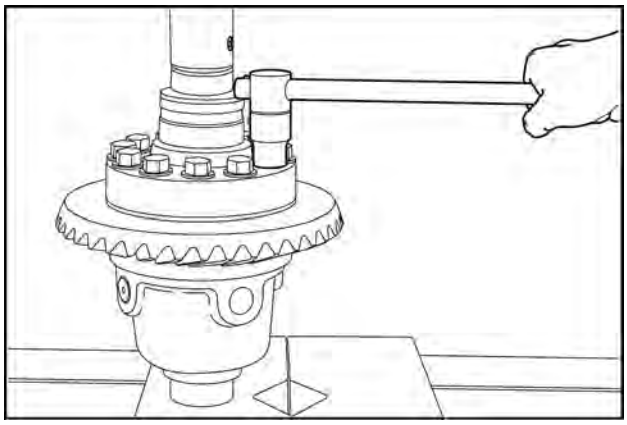

RAIL11WEL0037BA 2

3. Remove the lid and single parts from the differential.
   1. Lid
   2. Cylindrical pins (6 components)
   3. Cage
   4. Pressure piece
   5. Lever (12 components)

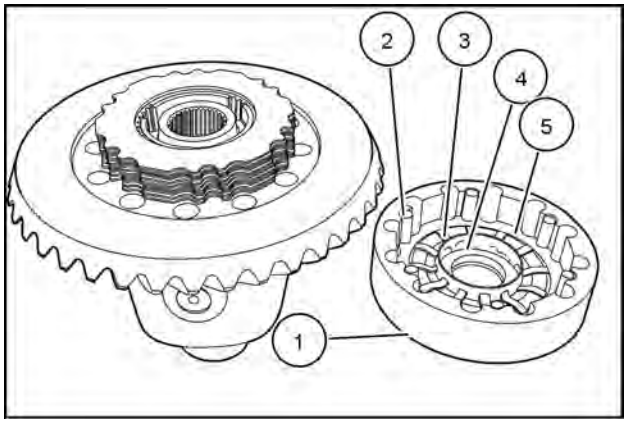

RAIL11WEL0038BA 3

4. Preload the housing cover/compression spring using the press and disengage the retaining ring. Then remove the sliding sleeve and compression spring from the housing cover.

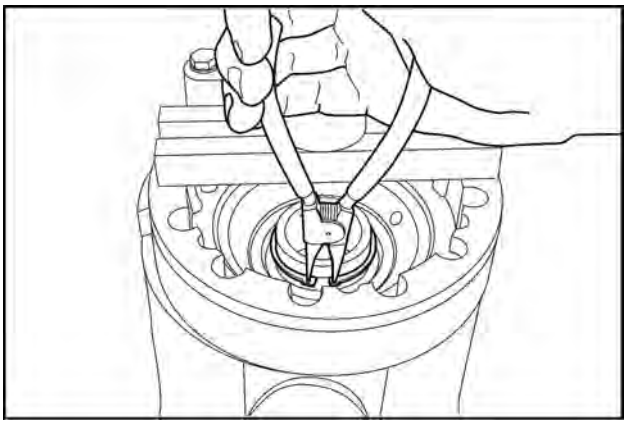

RAIL11WEL0039BA 4

5. Remove the disc package and the disc carrier.

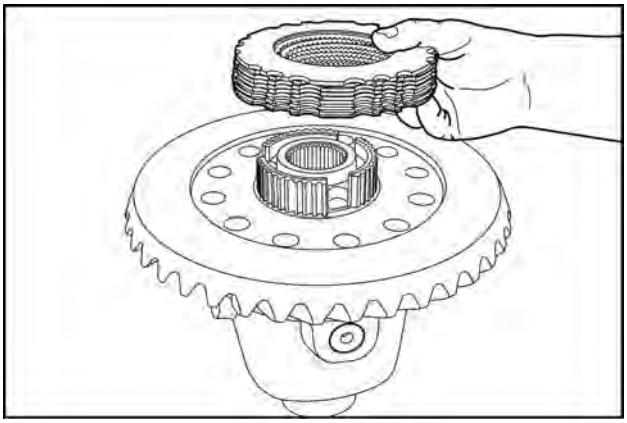

RAIL11WEL0040BA 5

6. Remove the crown wheel, axle bevel gear, thrust washer and constant spacer.
   1. Differential carrier
   2. Axle bevel gear
   3. Crown wheel
   4. Thrust washer
   5. Constant spacer

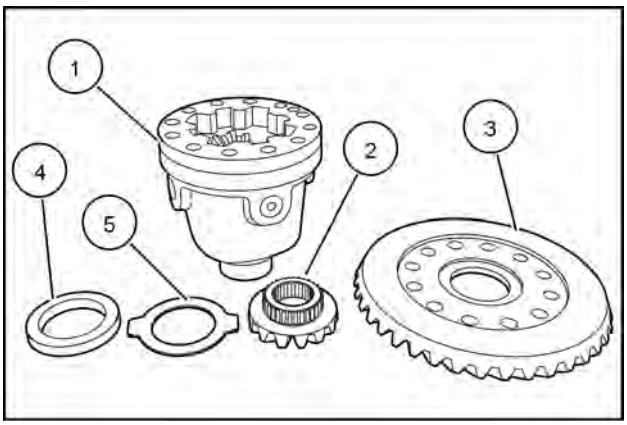

RAIL11WEL0041BA 6

7. Force slotted pins out of both spider shaft halves (split version). Then remove both spider shaft halves in arrow direction and take components out of the differential carrier.

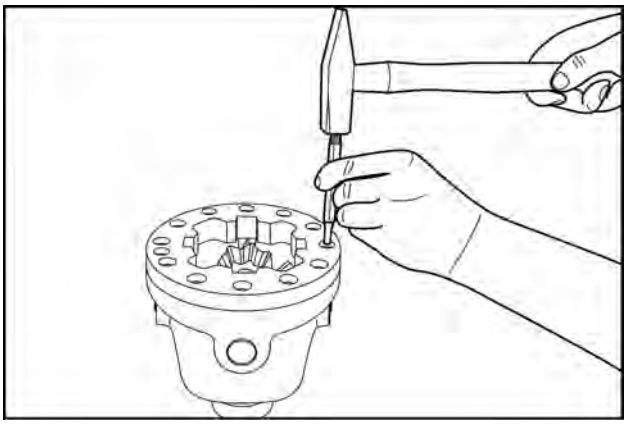

RAIL11WEL0042BA 7

8. Differential carrier components are as follows:
    1. Differential carrier
    2. Thrust washer (4 components)
    3. Spider gear (4 components)
    4. Spider shaft (split version)
    5. Slotted pin (3 components)
    6. Slotted pin (2 components)
    7. Spider shaft (1 piece)
    8. Outer disc
    9. Thrust washer
    10. Constant spacer
    11. Axle bevel gear

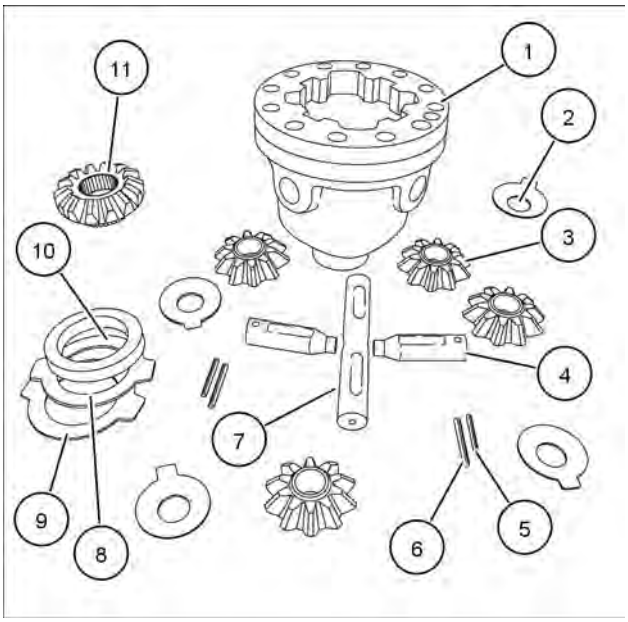

RAIL11WEL0059BA 8

Next operation:
Differential lock - Assemble - DHL-1200 (25.102)

Differential lock - Assemble - DHL-1200

621F

Prior operation:
Differential lock - Disassemble — DHL-1200 (25.102)

1. Insert constant spacer into the differential carrier.

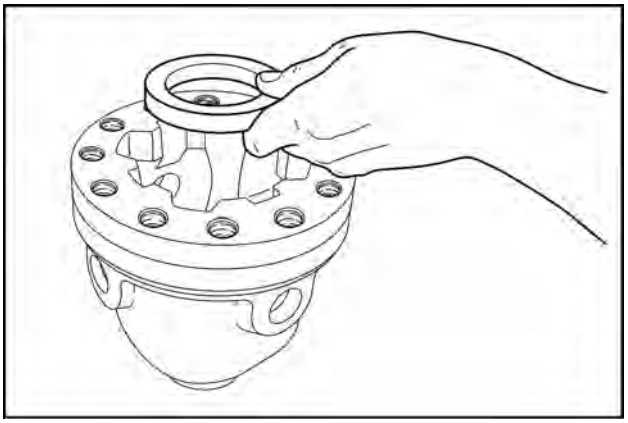

RAIL11WEL0465BA 1

2. Insert the steel outer disc **(1)** and thrust washer **(2)** into the differential carrier. Note the installation position.

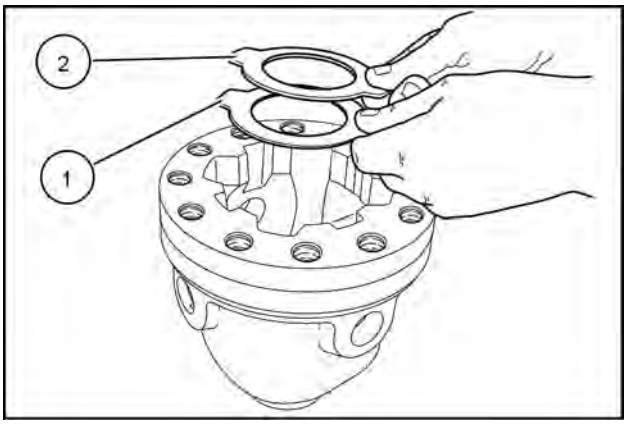

RAIL11WEL0466BA 2

3. Insert the axle bevel gear.

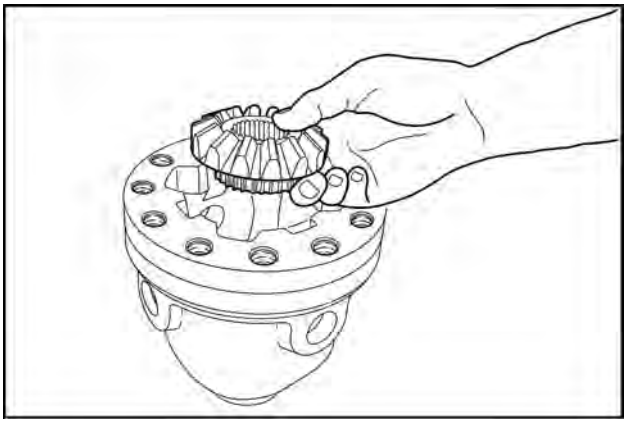

RAIL11WEL0467BA 3

4. Reassemble differential spider.
   1. Spider shaft (one part)
   2. Spider gear (4 components)
   3. Thrust washer (4 components)
   4. Spider shaft (split version)
   5. Slotted pin (2 components)
   6. Slotted pin (2 components)

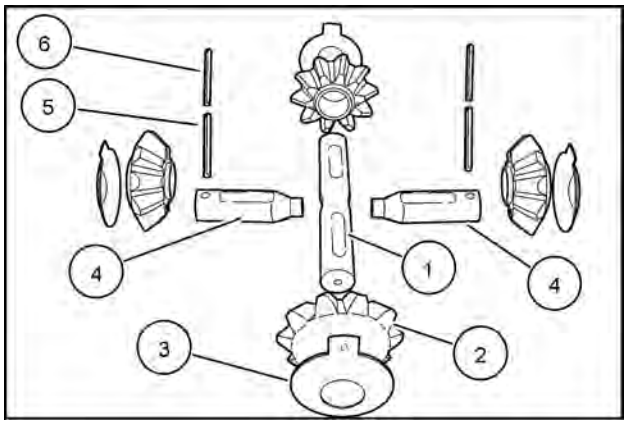

RAIL11WEL0468BA 4

5. Insert spider gears with thrust washers into the differential housing and secure them with the long spider shaft.

NOTE: *Position the thrust washers with the tabs (arrow) located in the recesses of the differential housing.*

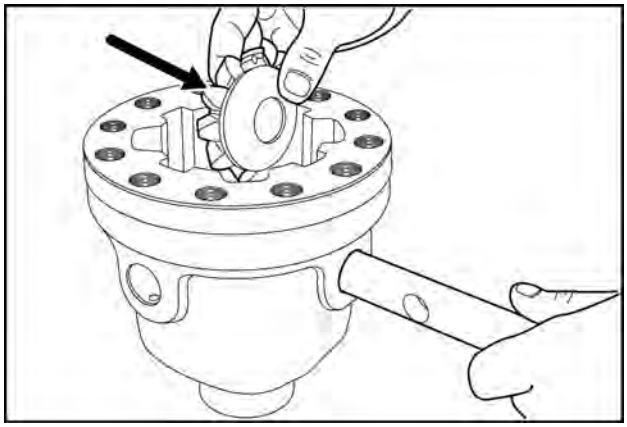

RAIL11WEL0469BA 5

6. Insert the spider gears with thrust washers into the differential housing and secure them with the two short spider shafts.

NOTE: *Position the thrust washers with the tabs **(1)** located in the recesses of the differential housing.*

NOTE: *Observe the radial installation position of the securing holes **(2)** on the spider shafts.*

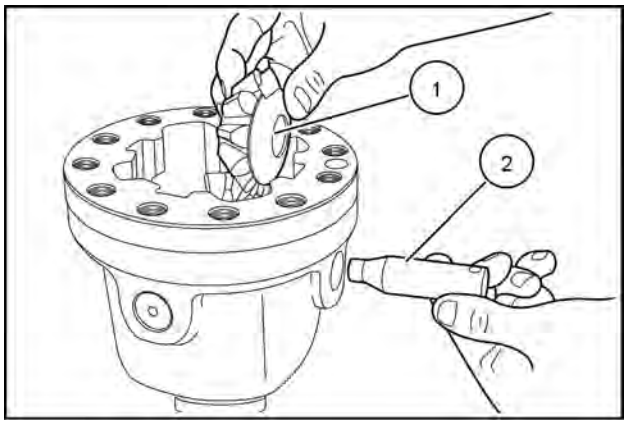

RAIL11WEL0470BA 6

7. Secure short spider shafts with slotted pins. Slotted pins should be flush mounted with openings installed **180 °** offset to each other.

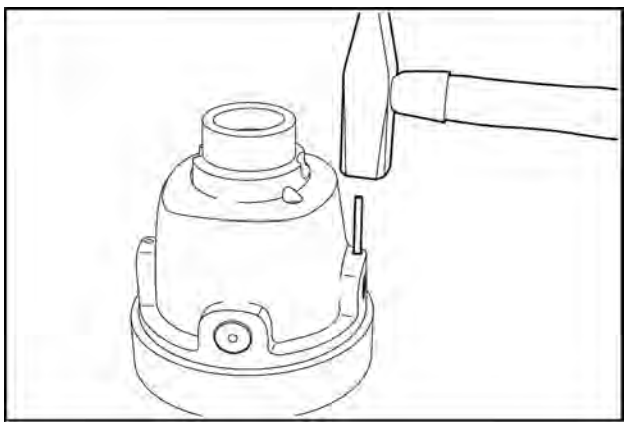

RAIL11WEL0471BA 7

8. Mount second axle bevel gear.

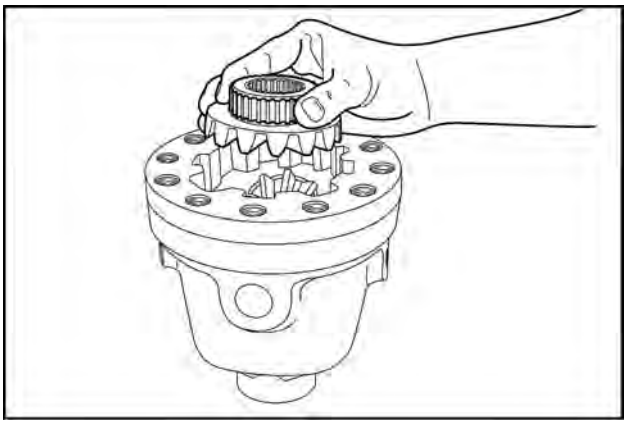

RAIL11WEL0472BA 8

9. Insert the thrust washer **(1)** and constant spacer **(2)** into the differential carrier.

NOTE: *Pay attention to the installation positioning.*

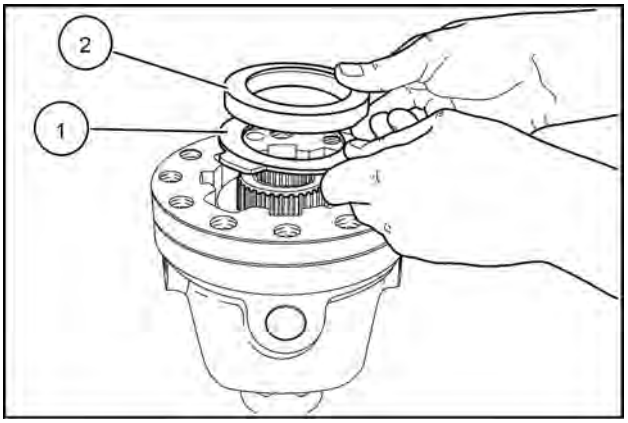

RAIL11WEL0473BA 9

10. Mount two locating pins (arrows) and press the crown wheel onto the differential housing.

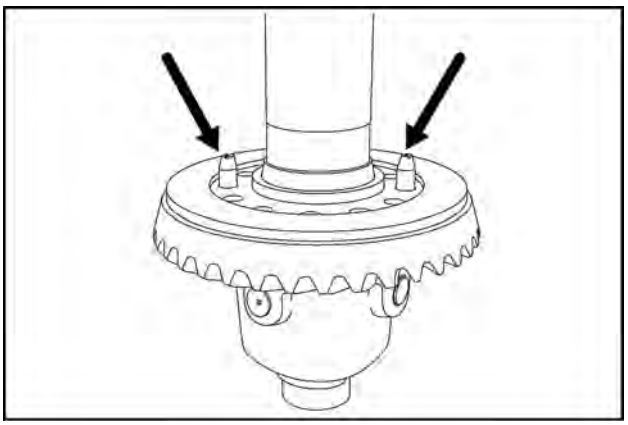

RAIL11WEL0474BA 10

11. Install compression spring onto the sliding sleeve.

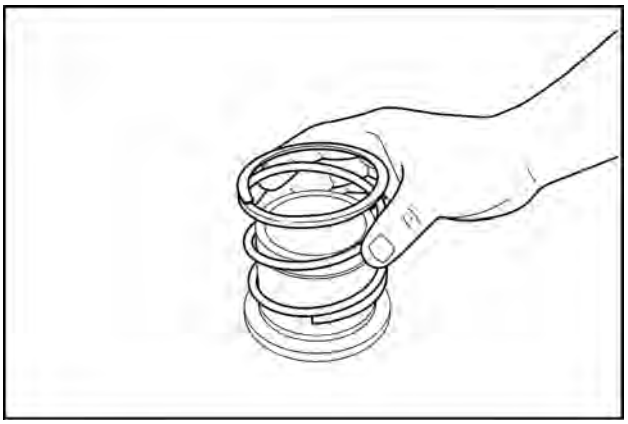

RAIL11WEL0475BA 11

12. Insert the premounted sliding sleeve into the housing cover. Then preload the compression spring using a press and engage the retaining ring into the annular grove of the sliding sleeve.

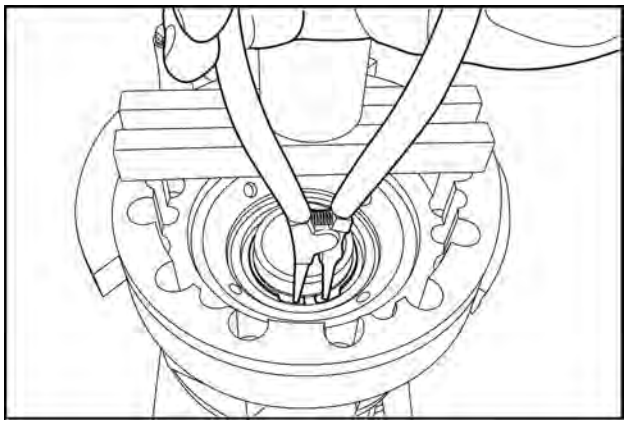

RAIL11WEL0476BA 12

13. Premount the single parts to resemble the adjacent sketch.
    1. Lid
    2. Pressure piece
    3. Cage
    4. Lever (12 components)
    5. Pressure piece

NOTE: *Be sure that the lid is supported only by the pressure piece* ***(5)****, but never on the sliding sleeve.*

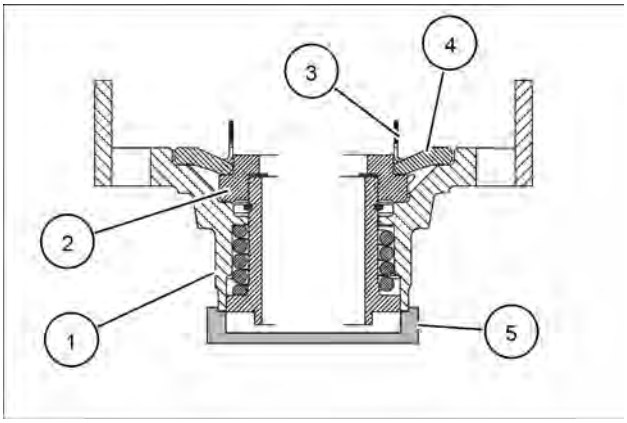

RAIL11WEL0591BA 13

14. Set the disc package by placing the cylindrical pins (6 components) into the lid with grease.

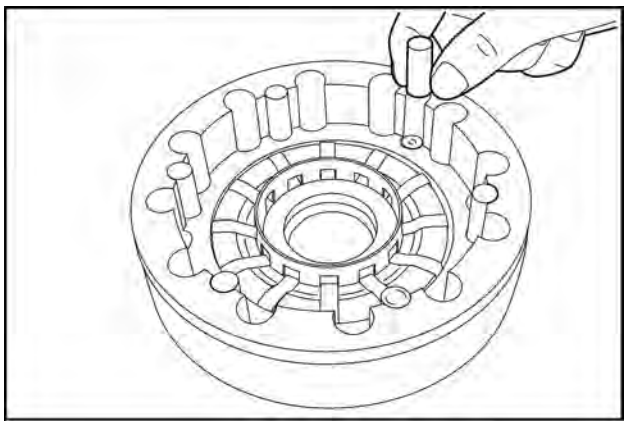

RAIL11WEL0477BA 14

15. Insert the disc package into the lid. Pay attention to the radial installation position of the outer disc. Locating grooves **(1)** of the outer disc are to be positioned over the cylindrical pins **(2)**.

NOTE: *For the number of disks and the disk arrangement, refer to the related spare parts list.*

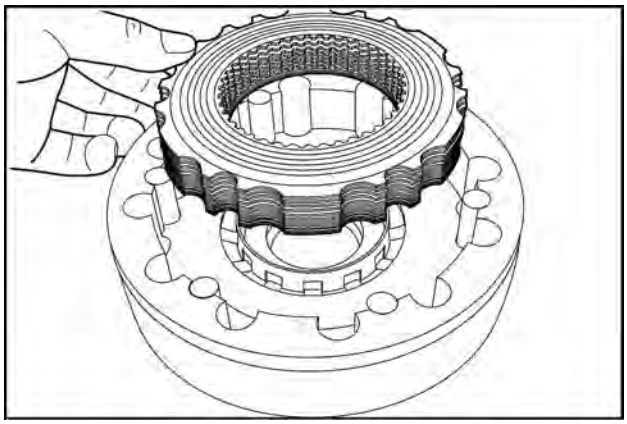

RAIL11WEL0478BA 15

16. Install the snap ring (arrow) in the annular groove of the disc carrier. Then insert the preassembled disc carrier so that all the inner discs are mounted.

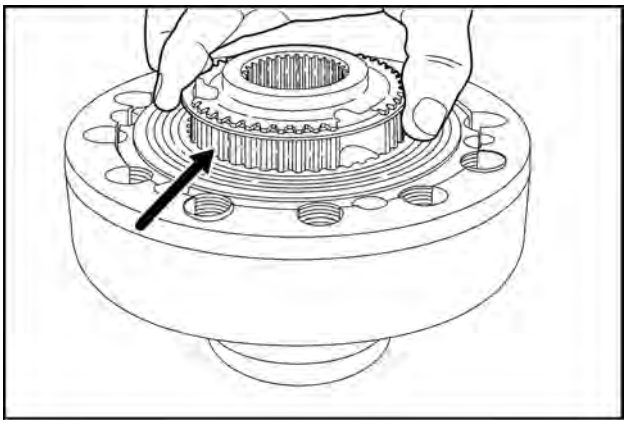

RAIL11WEL0479BA 16

17. Preload disk package with an axial force of F=50 + 30 KN. Then check the setting dimension “A” = 0.8 +/- 0.1 mm from the collar of the lid to the plane face of the outer disk (see also below sketch).

NOTE: *Any deviation from the specified setting dimension must be corrected with a corresponding outer disk.*

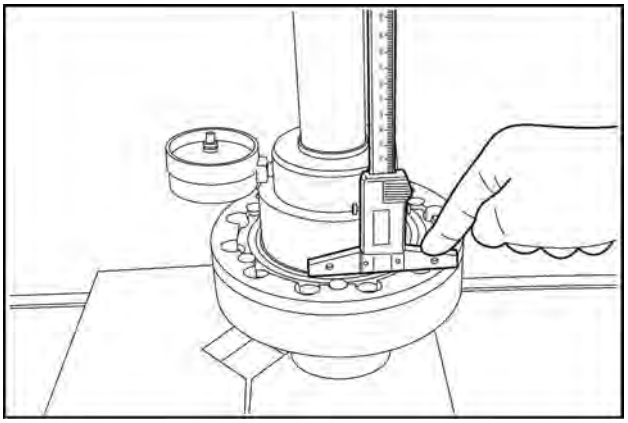

RAIL11WEL0480BA 17

18. A = Setting dimension = 0.8 +/- 0.1 mm and F = 50 +30 KN.
    1. Lid
    2. Pressure piece
    3. Sliding sleeve
    4. Pressure piece
    5. Disc package
    6. Disc carrier
    7. Load cell

NOTE: *Ensure that lid **(1)** is only supported on the pressure piece **(2)** but never on the sliding sleeve **(3)**.*

NOTE: *Ensure that pressure piece **(4)** is seated only on disc package **(5)**, but not on disc carrier **(6)**.*

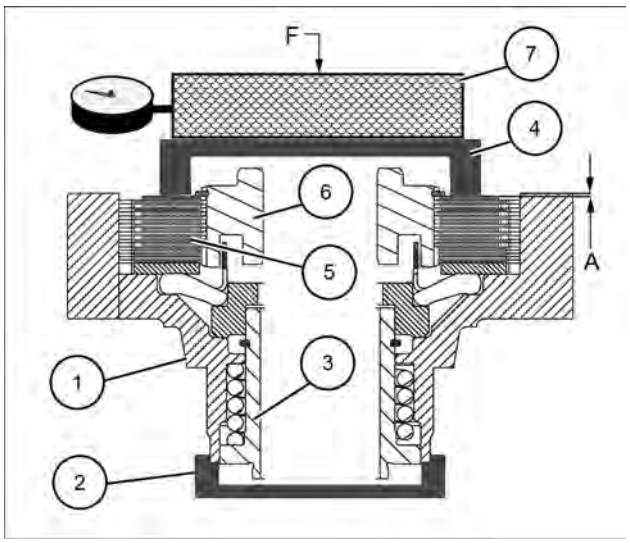

RAIL12WEL0061BA 18

19. Position the premounted differential with the lifting device onto the lid. Temporarily secure with new locking bolts.

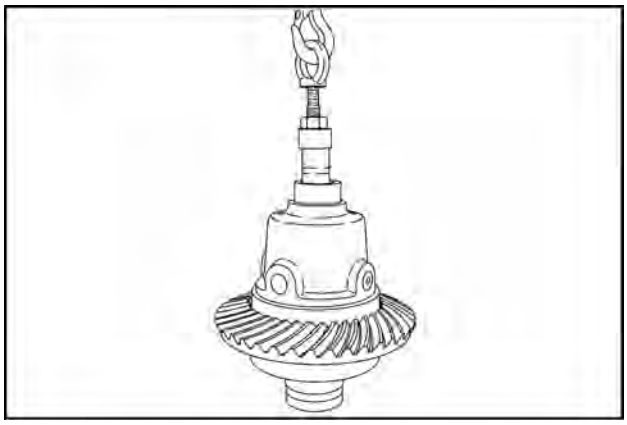

RAIL11WEL0481BA 19

20. Preload the differential with a press and the pressure piece. Then tighten the housing cover with new locking bolts. Torque bolts to **400 N·m** (**295 lb ft**).

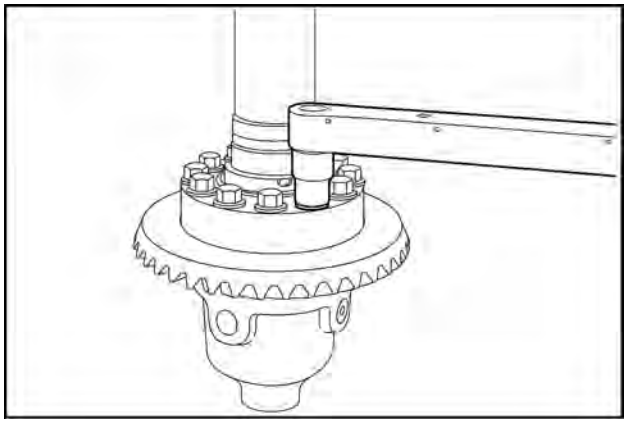

RAIL11WEL0482BA 20

21. Heat both tapered roller bearings (arrows) and install them on the differential.

NOTE: *Adjust tapered roller bearing after it cools.*

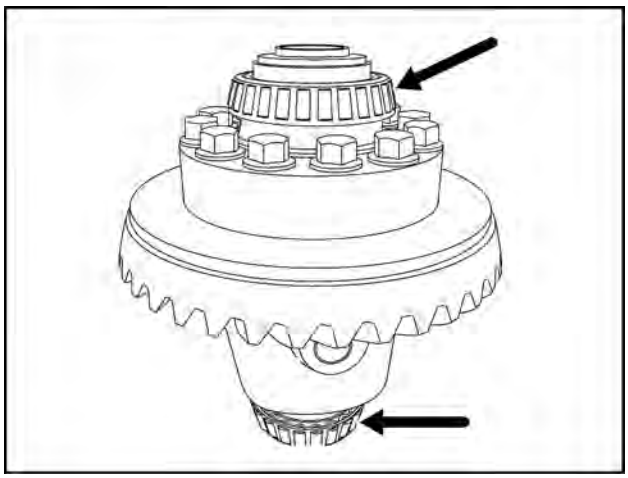

RAIL11WEL0483BA 21

Next operation:
Bevel gear set and differential carrier - Backlash — Models MT-L 3065 II / MT-L 3075 II (25.102)

Differential lock - Disassemble - DHL-2400

721F

Prior operation:
Differential - Remove — Models MT-L 3085 II / MT-L 3095 II (25.102)

1. Remove axial roller cage (arrow).

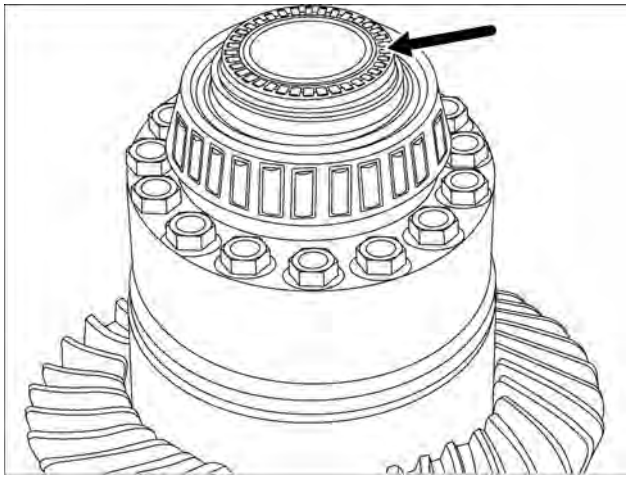

RAIL11WEL0242BA 1

2. Pull both tapered roller bearings from differential.

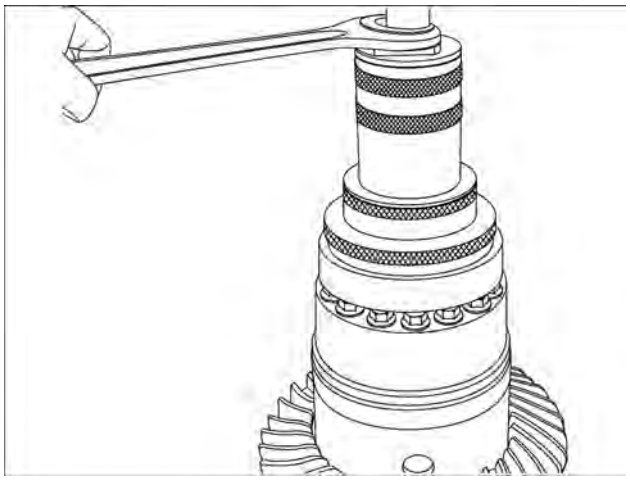

RAIL11WEL0243BA 2

3. Preload differential using a press. Remove hex bolts and releasing housing cover.

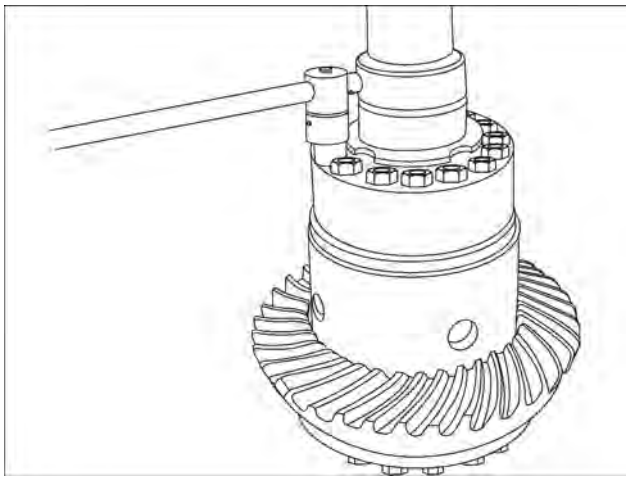

RAIL11WEL0244BA 3

4. Preload housing cover/compression spring using a press. Disengage retaining ring. Remove sliding sleeve and compression spring from housing cover.

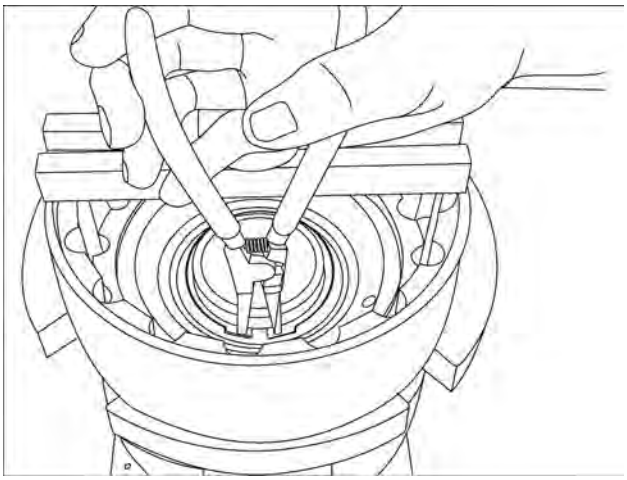

RAIL11WEL0245BA 4

5. Remove the following single parts:.
   1. Pressure piece
   2. Cage
   3. Lever (12x)
   4. Disk carrier
   5. Disk package

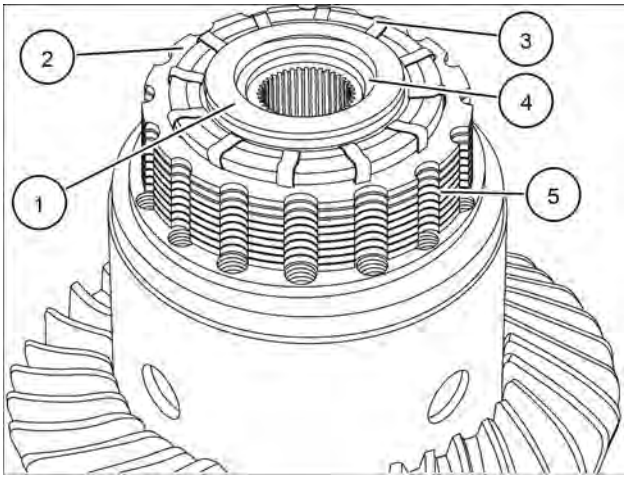

RAIL11WEL0246BA 5

6. Preload differential using a press. Remove locking bolts and housing cover.

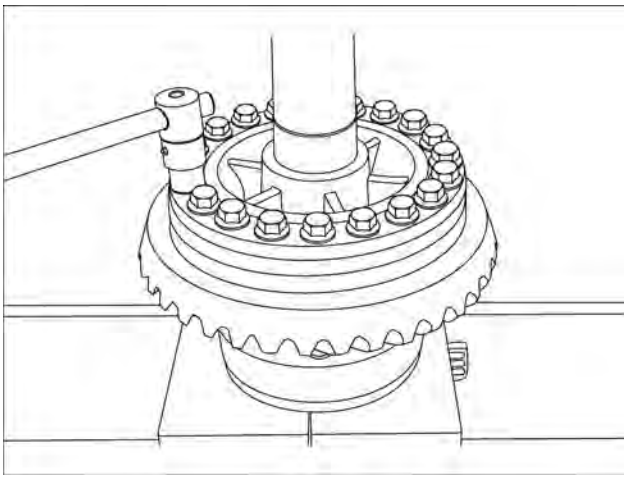

RAIL11WEL0247BA 6

7. Remove axle bevel gear with thrust washers from differential housing.

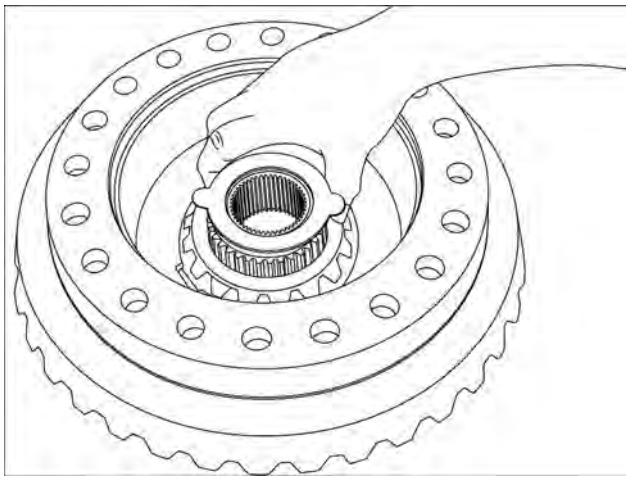

RAIL11WEL0248BA 7

8. Force out both slotted pins.

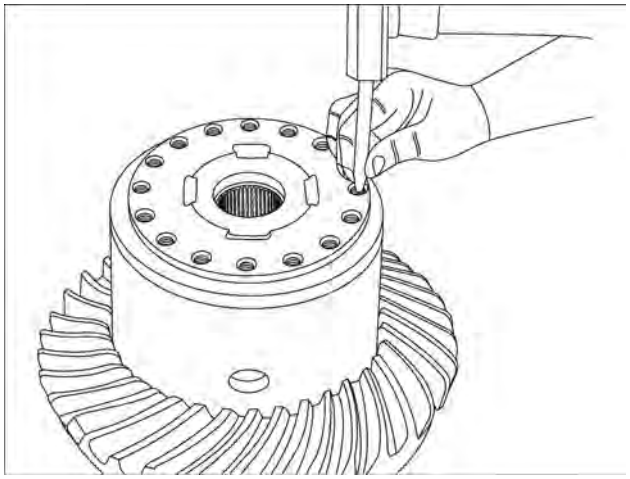

RAIL11WEL0249BA 8

9. Remove both short differential axles. Remove releasing spider gears and thrust washers from differential housing.

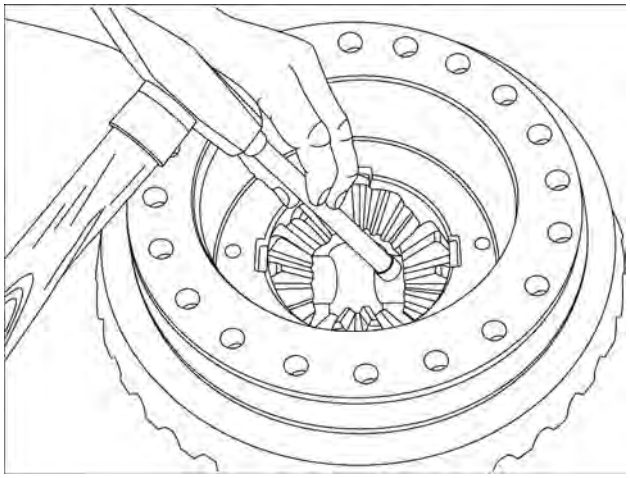

RAIL11WEL0250BA 9

10. Remove long differential axle, releasing spider gears and thrust washers from differential housing.

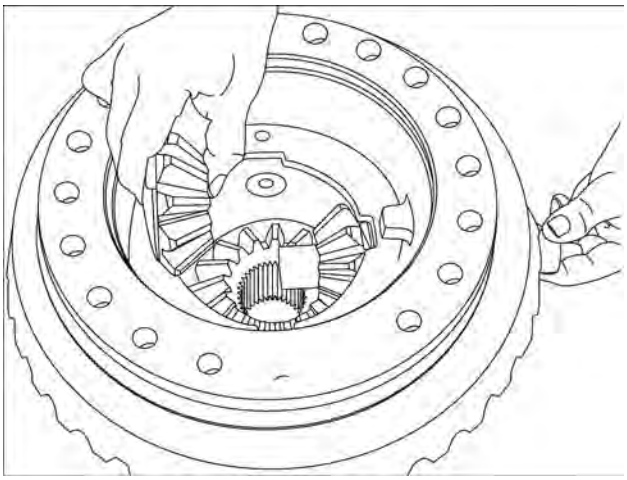

RAIL11WEL0251BA 10

11. Remove axle bevel gear and shim.

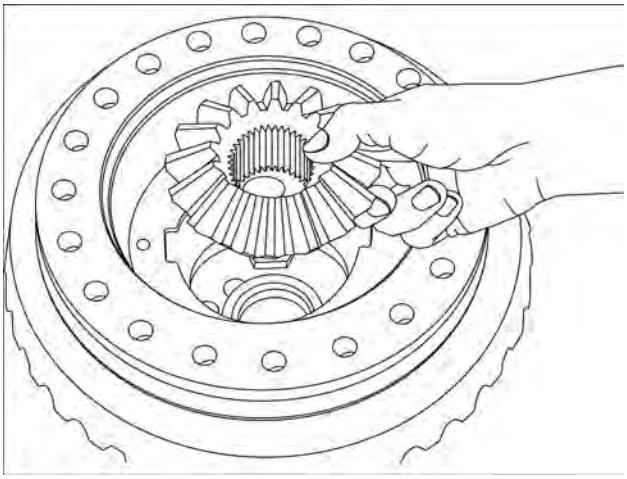

RAIL11WEL0252BA 11

12. Press crown wheel from differential carrier.

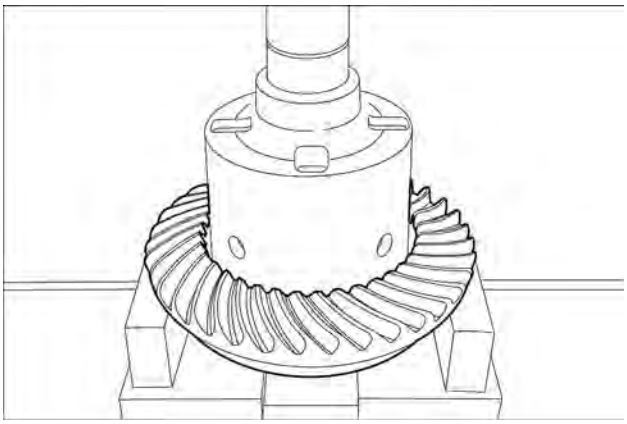

RAIL11WEL0241BA 12

Next operation:
Differential lock - Assemble — DHL-2400 (25.102)