TURBOCHARGER

The turbocharger is installed on the exhaust manifold. All the exhaust gases from the engine go through the turbocharger.

The exhaust gases go through the blades of the turbine wheel. This causes the turbine wheel and compressor wheel to turn which causes a compression of the inlet air

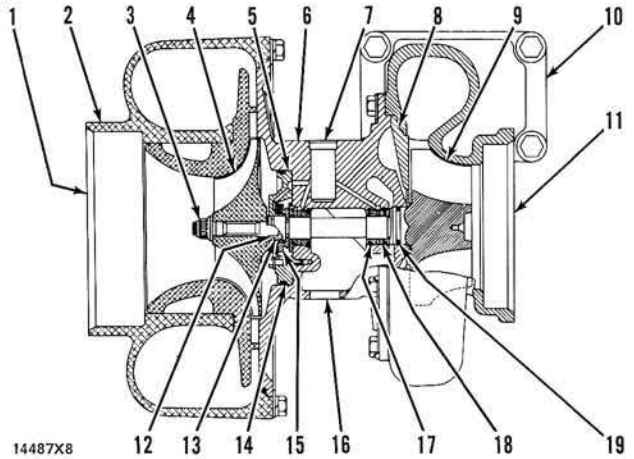

TURBOCHARGER
(Typical Illustration)

1. Air inlet. 2. Compressor housing. 3. Nut. 4. Compressor wheel. 5. Thrust plate. 6. Center housing. 7. Lubrication inlet port. 8. Shroud. 9. Turbine wheel and shaft. 10. Turbine housing. 11. Exhaust outlet. 12. Spacer. 13. Ring. 14. Seal. 15. Collar. 16. Lubrication outlet port. 17. Ring. 18. Bearing. 19. Ring.

When the load on the engine goes up more fuel is put into the engine. This makes more exhaust gases and will cause the turbine and compressor wheels of the turbocharger to turn faster. As the turbocharger turns faster, it gives more inlet air and makes it possible for the engine to burn more fuel and will give the engine more power.

Maximum rpm of the turbocharger is controlled by the fuel or rack setting, the high idle speed setting and the height above sea level at which the engine is operated.

⚠ WARNING

If the high idle rpm or the fuel system setting is higher than given in the FUEL SETTING INFORMATION (for the height above sea level at which the engine is operated), there can be damage to engine or turbocharger parts.

The bearings for the turbocharger use engine oil under pressure for lubrication. The oil comes in through the oil inlet port and goes through passages in the center section for lubrication of the bearings. Oil from the turbocharger goes out through the oil outlet port in the bottom of the center section and goes back to the engine lubrication system.

The fuel system adjustment is done at the factory for a specific engine application. The governor housing and turbocharger are sealed to prevent changes in the adjustment of the fuel or rack setting and the high idle speed setting.

AIR INLET AND EXHAUST SYSTEM

(Engines Without Turbochargers)

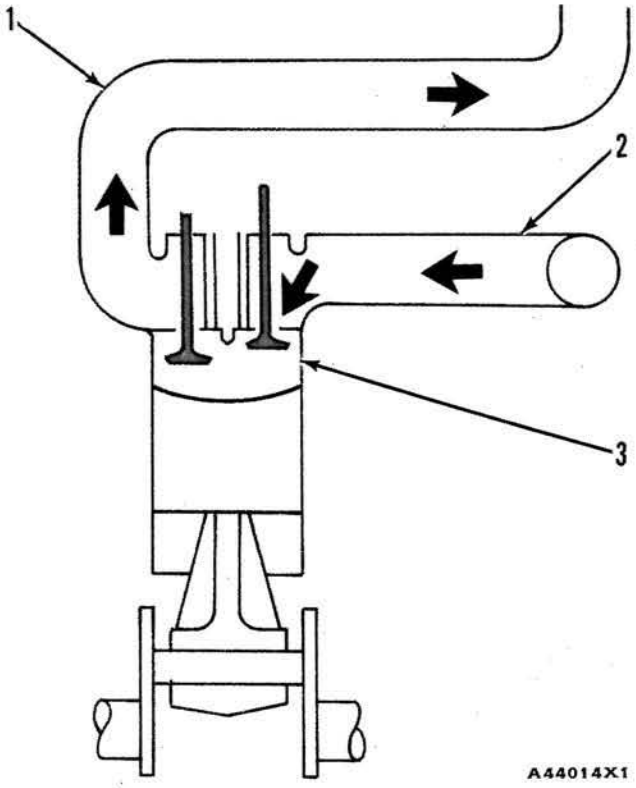

AIR INLET AND EXHAUST SYSTEM FOR ENGINES WITHOUT A TURBOCHARGER

1. Exhaust manifold. 2. Inlet manifold. 3. Engine cylinder.

The air inlet and exhaust system components are: air cleaner, inlet manifold, cylinder head, valves and valve system components and exhaust manifold.

When the engine is running, each time a piston moves through the inlet stroke, it pulls air into the cylinder. The air flow is through the air filter, inlet manifold, passages in the cylinder head and past the open intake valve into the cylinder. Too much restriction in the inlet air system makes the efficiency of the engine less.

When the engine is running, each time a piston moves through the exhaust stroke, it pushes hot exhaust gases from the cylinder. The exhaust gas flow is out of the cylinder between the open exhaust valve and the exhaust valve seat. Then it goes through passages in the cylinder head, through the exhaust manifold and out through the exhaust pipe. Too much restriction in the exhaust system makes the efficiency of the engine less.

TIMING GEARS

The timing gears are at the front of the cylinder block. Their cover is the housing for the timing gears. The timing gears keep the rotation of the crankshaft, camshaft and fuel injection pump in the correct relation to each other. The timing gears are driven by the crankshaft gear.

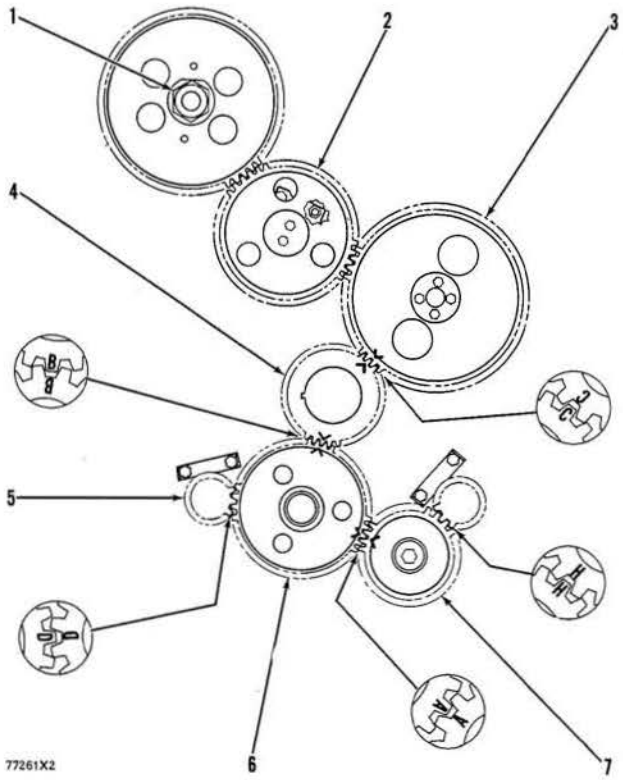

TIMING GEARS

1. Drive gear for fuel injection pump. 2. Idler gear for fuel injection pump. 3. Camshaft gear. 4. Crankshaft gear. 5. Balancer shafts. 6. Idler gear for oil pump. 7. Drive gear for oil pump.

VALVES AND VALVE MECHANISM

The valves and valve mechanism control the flow of air and exhaust gases in the cylinder during engine operation.

The intake and exhaust valves are opened and closed by movement of these components; crankshaft, camshaft, valve lifters (cam followers), push rods, rocker arms and valve spring. Rotation of the crankshaft causes rotation of the camshaft. The camshaft gear is driven by, and timed to, a gear on the front of the crankshaft. When the camshaft turns, the cams on the camshaft also turn and cause the valve lifter (cam followers) to go up and down. This movement makes the push rods move the rocker arms. The movement makes the push rods move the rocker arms. The movement of the rocker arms will make the intake and exhaust valves in the cylinder head open according to the firing order (injection sequence) of the engine. A valve spring for each valve pushes the valve back to the closed position.

Valve rotators cause the valves to have rotation while the engine is running. This rotation of the valves keeps the deposit of carbon on the valves to a minimum and gives the valves longer service life.

LUBRICATION SYSTEM

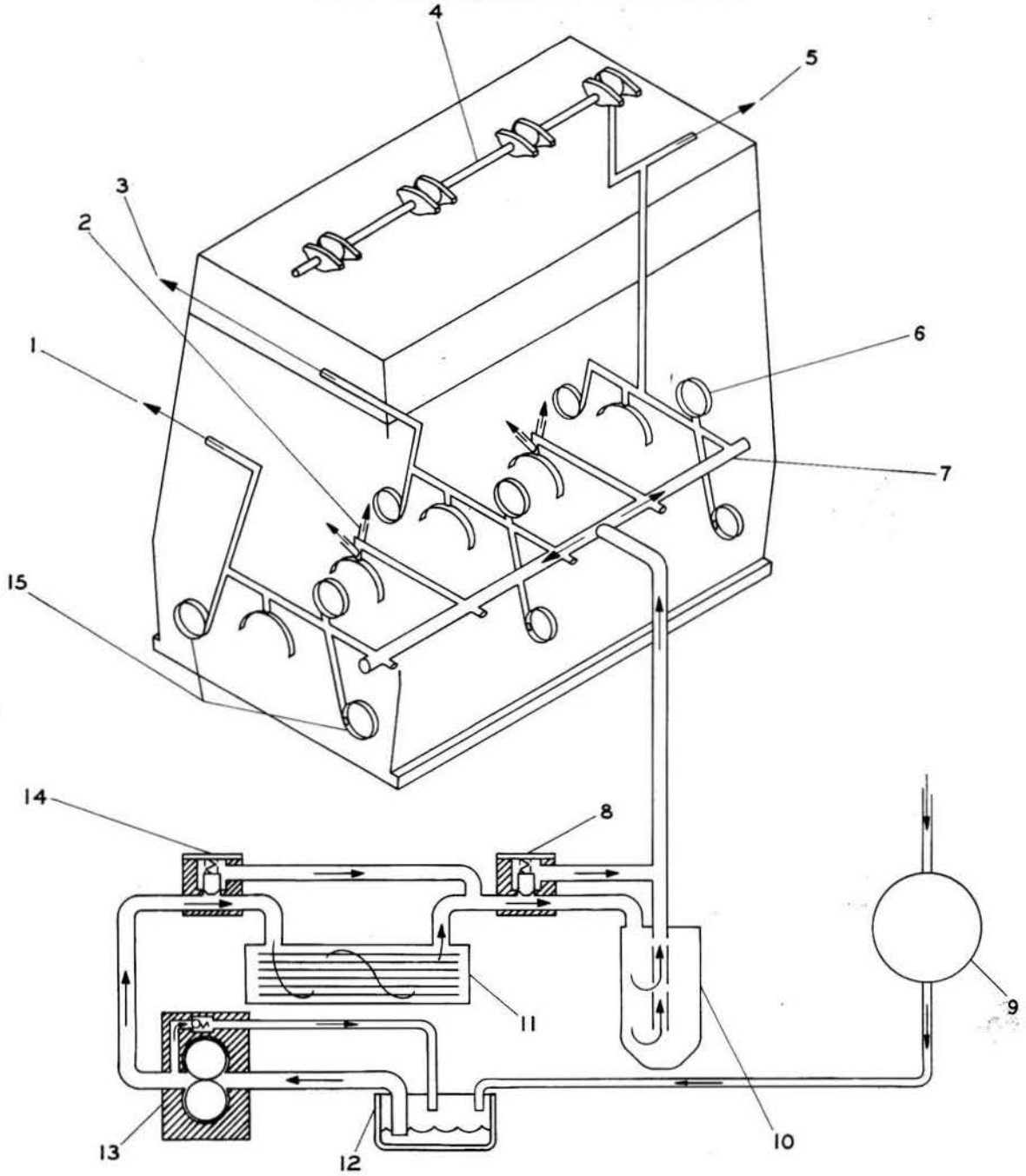

LUBRICATION SYSTEM SCHEMATIC
(For Engines With Turbocharger)

1. Oil pressure connection. 2. Piston cooling orifices. 3. Oil supply for turbocharger. 4. Oil passage through rocker shaft to rocker arms. 5. Oil pressure connection. 6. Camshaft bores. 7. Oil manifold. 8. Filter bypass. 9. Turbocharger (if so equipped). 10. Oil filter. 11. Oil cooler. 12. Oil sump. 13. Oil pump. 14. Oil cooler bypass. 15. Balancer shaft bores.

The lubrication system has the following components: oil pan, oil pump, oil cooler, oil filter, oil passages in the cylinder block, and lines to engine components and attachments.

NOTE: Most engines without turbochargers do not have an oil cooler (11). If a turbocharger is installed on the engine, be sure to install an oil cooler (11) and orifices (2). If the engine has an oil cooler (11) and no turbocharger, be sure to install orifices (2). If the engine does not have an oil cooler (11) or a turbocharger, plugs must be installed in the holes for orifices (2) in the cylinder block.

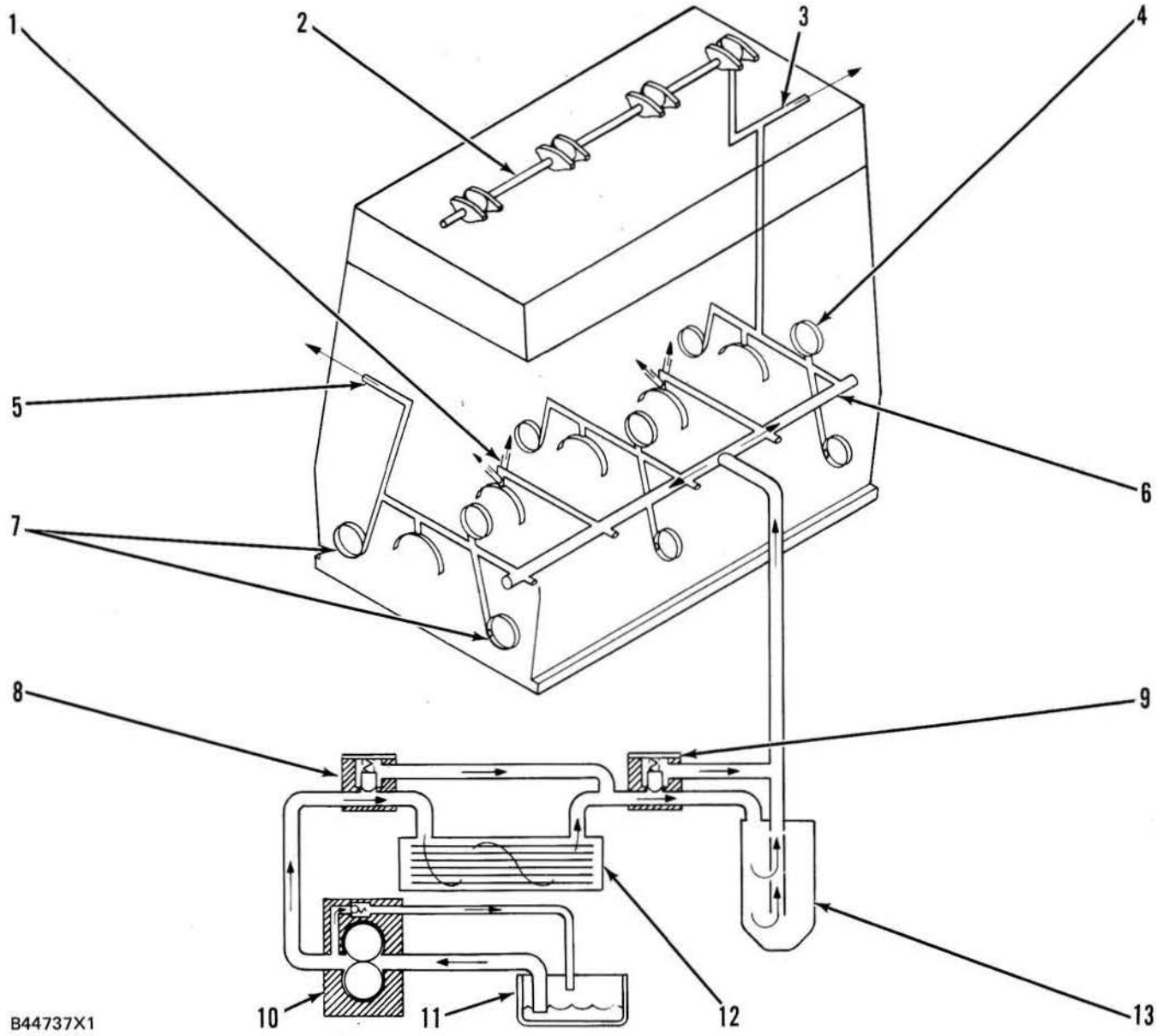

LUBRICATION SYSTEM SCHEMATIC
(For Engines With Oil Cooler and Without Turbocharger)

1. Oil pressure connection. Piston cooling orifices. 4. Oil passage through rocker shaft to rocker arms. 5. Oil pressure connection. 6. Camshaft bores. 7. Oil manifold. 8. Filter bypass. 10. Oil filter. 11. Oil cooler. 12. Oil sump. 13. Oil pump. 14. Oil cooler bypass. 15. Balancer shaft bores.

OIL FLOW THROUGH THE OIL FILTER AND OIL COOLER

With the engine warm (normal operation), oil comes from the oil pan (6) through the suction bell (9) to the oil pump (7). The oil pump sends warm oil to the oil cooler (10) and then to the oil filter (4). From the oil filter, oil is sent to the oil manifold (1) in the cylinder block and to the oil supply line (2) for the turbocharger. Oil from the turbocharger goes back through the oil return line (3) to the oil pan.

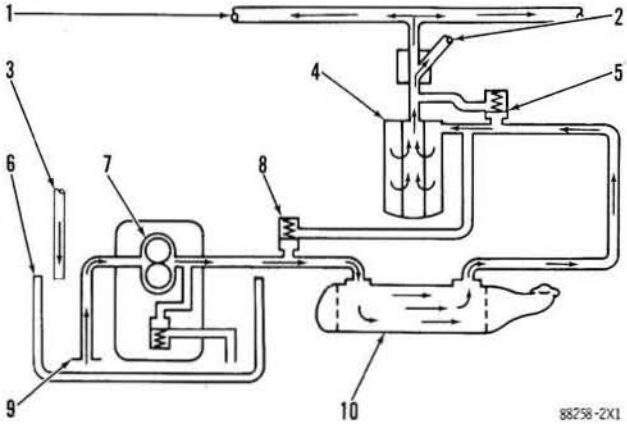

FLOW OF OIL (ENGINE WARM)

1. Oil manifold in cylinder block. 2. Oil supply line to turbocharger. 3. Oil return line from turbocharger. 4. Oil filter. 5. Bypass valve for the oil filter. 6. Oil pan. 7. Oil pump. 8. Bypass valve for the oil cooler. 9. Suction bell. 10. Oil cooler.

With the engine cold (starting conditions), oil comes from the oil pan (6) through the suction bell (9) to the oil pump (7). When the oil is cold, an oil pressure difference in the bypass valve (installed in the oil filter housing) causes the valves to open. These bypass valves give immediate lubrication to all components when cold oil with high viscosity causes a restriction to the oil flow through the oil cooler (10) and oil filter (4). The oil pump then sends the cold oil through the bypass valve for the oil cooler (8) and through the bypass valve for the oil filter (5) to the oil manifold (1) in the cylinder block and to the supply line (2) for the turbocharger. Oil from the turbocharger goes back through the oil return line (3) to the oil pan.

When the oil gets warm, the pressure difference in the bypass valves decreases and the bypass valves close. Now there is a normal oil flow through the oil cooler and oil filter.

The bypass valves will also open when there is a restriction in the oil cooler or oil filter. This action does not let an oil cooler or oil filter with a restriction prevent the lubrication of the engine.

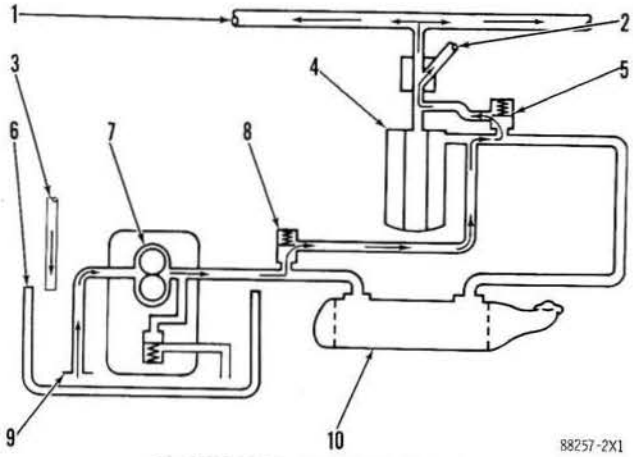

FLOW OF OIL (ENGINE COLD)

1. Oil manifold in cylinder block. 2. Oil supply line to turbocharger. 3. Oil return line from turbocharger. 4. Oil filter. 5. Bypass valve for the oil filter. 6. Oil pan. 7. Oil pump. 8. Bypass valve for the oil cooler. 9. Suction bell. 10. Oil cooler.

OIL FLOW IN THE ENGINE

There is a bypass valve in the oil pump. This bypass valve controls the pressure of the oil coming from the oil pump. The oil pump can put more oil into the system than is needed. When there is more oil than needed, the oil pressure goes up and the bypass valve opens. This lets the oil that is not needed go back to the oil pan.

PRESSURE OIL A87922X1

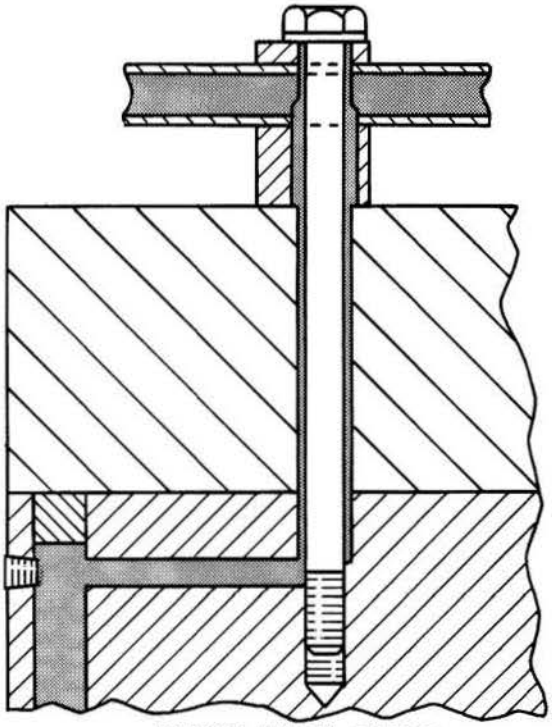

ROCKER ARM OIL SUPPLY
(Engines without spacer plate)

NOTE: The later oil pumps have a different kind of spring in the bypass valve in the oil pump. These bypass valves are not adjustable.

The output of the oil pump goes to the oil manifold in the cylinder block. The oil manifold is the source of oil under pressure for the engine and its attachments.

From the oil manifold in the cylinder block, oil is sent through drilled passages in the cylinder block that connect the main bearings and the camshaft bearings. Oil goes through drilled holes in the crankshaft to give lubrication to the connecting rod bearings.

On engines with turbochargers and/or an oil cooler oil goes out through piston cooling orifices in the block. These orifices are between cylinders 1 and 2 and between cylinders 3 and 4, near the main bearings. This oil cools the pistons and helps lubricate the pistons, piston pins, cylinder walls and piston rings. On engines without piston cooling orifices oil thrown by other parts lubricates the pistons, piston pins, cylinder walls and piston rings.

Oil is sent through passages to the rocker arm shaft. Holes in the rocker arm shafts let the oil give lubrication to the valve system components in the cylinder head.

The oil supply passage for the rocker arms is in a different location in the engine w/spacer plate. Engines w/o a spacer plate have an oil passage from the rear of the cylinder block to a head bolt hole in the block. The oil flows around the head bolt, up through the cylinder head and rocker arm shaft bracket, to the rocker arm shaft.

Engines w/spacer plate have an oil passage from the rear of the cylinder block that goes below the head bolt hole and connects with a drilled passage in the cylinder block to the oil passage in the head. The spacer plate has a hole with a counterbore on each side that the hollow dowel goes through. An O-ring is in each counterbore to prevent oil leakage around the hollow dowel. Oil flows through the hollow dowel into a vertical passage in the cylinder head to the rocker arm shaft bracket. The rocker arm shaft has an orifice to restrict the oil flow to the rocker arms. The rear rocker arm bracket also has an O-ring that seals against the head bolt. This seal prevents oil from going down around the head bolt and leaking past the head gasket or spacer plate gasket. The O-ring must be replaced each time the head bolt is removed from the rear rocker arm bracket.

All the timing gear bearings get lubricant under pressure from the oil manifold through connecting drilled passages.

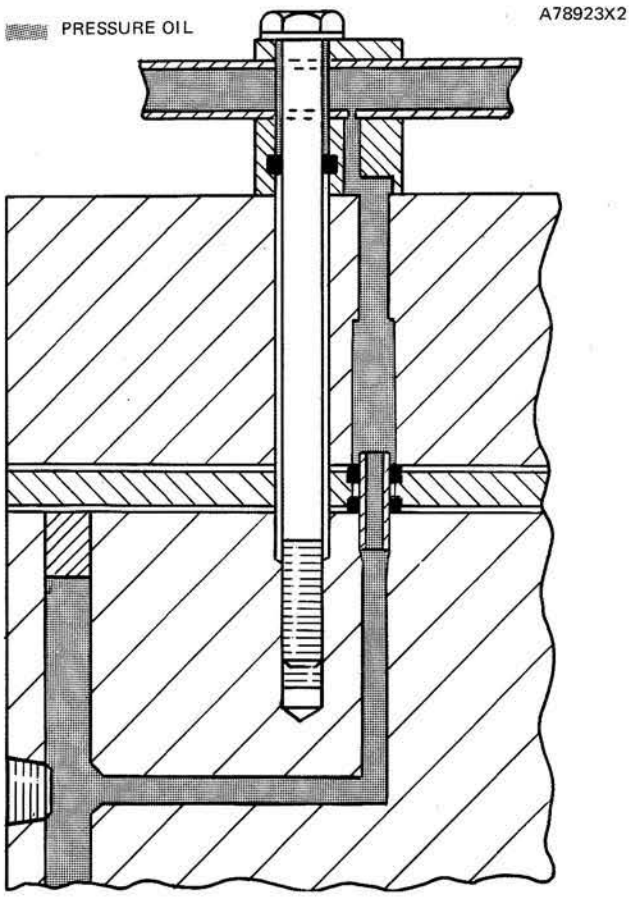

ROCKER ARM OIL SUPPLY
(Engines w/spacer plate)

Oil goes to the components and attachments on the outside of the engine through supply lines which connect to the oil manifold. These components and attachments are: turbocharger, air compressor and others.

After the lubrication oil has done its work, it goes back to the engine oil pan.

COOLING SYSTEM

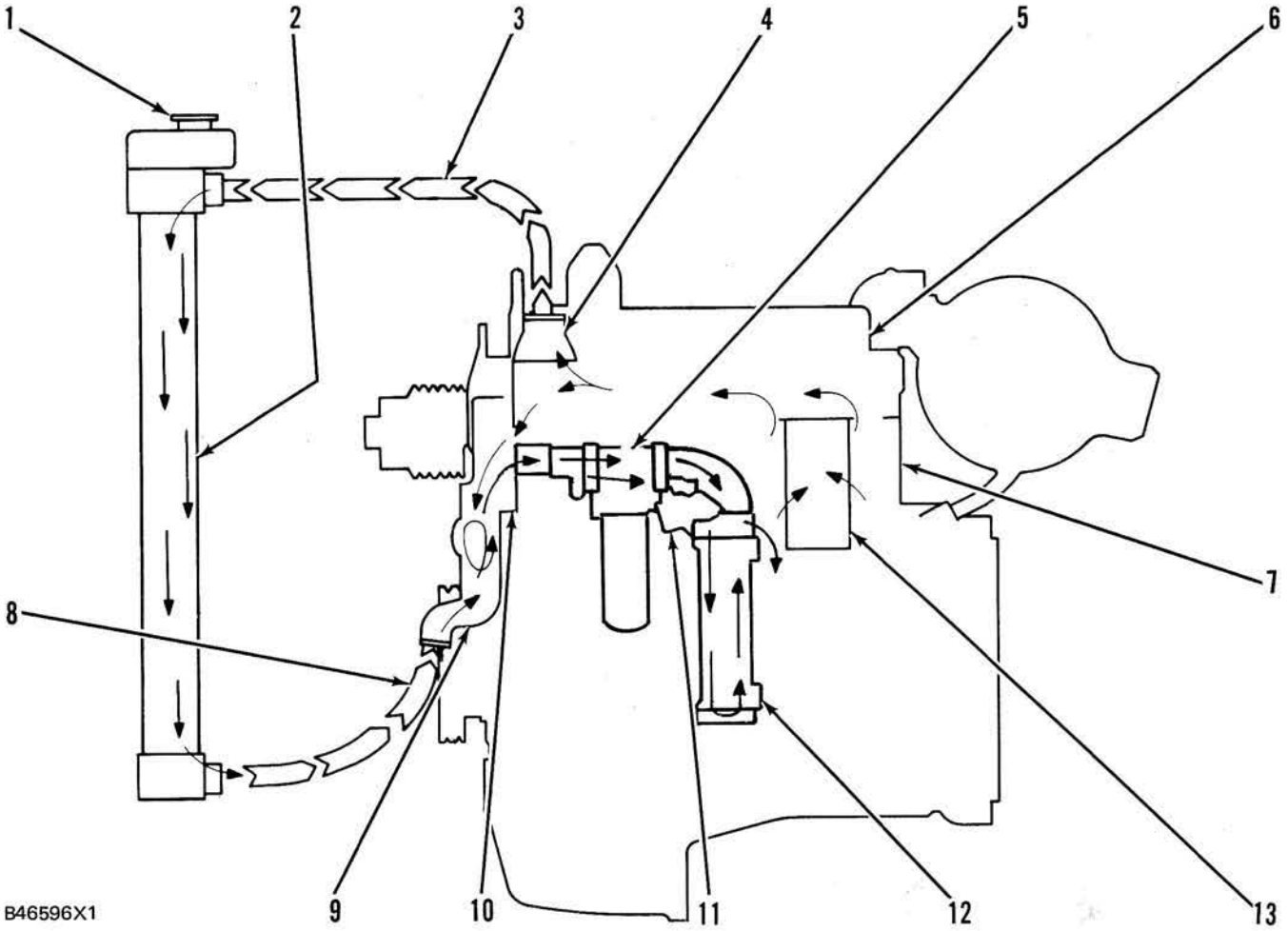

COOLING SYSTEM SCHEMATIC

1. Filler cap. 2. Radiator. 3. Inlet line for radiator. 4. Water temperature regulator. 5. Engine oil cooler. 6. Cylinder head. 7. Cylinder block. 8. Inlet line for water pump. 9. Water pump. 10. Internal bypass. 11. Bonnet. 12. Transmission oil cooler. 13. Cylinder liner.

Water pump (9) is on the left front side of the engine. It is gear driven by the timing gears. Coolant from the bottom of radiator (2) goes to water pump inlet (8). The rotation of the impeller in water pump (9) pushes the coolant through the system.

When an engine is equipped with a direct drive transmission, all of the coolant flow from water pump (9) goes through engine oil cooler (5). Bonnet (11) on the outlet side of engine oil cooler (5) connects to the side of cylinder block (7).

Engines with power shift transmissions have an additional oil cooler (12). A different bonnet (11) is on engine oil cooler (5). This bonnet (11) sends the coolant flow through the other cooler (12) which is for the torque converter. The flow goes through one side on the way into cooler (12). At the bottom of cooler (12) the flow turns and goes back up through the other side and into bonnet (11) again. Then bonnet (11) sends the coolant into cylinder block (7).

Inside cylinder block (7) the coolant goes around cylinder liners (13) and up through the water direc-

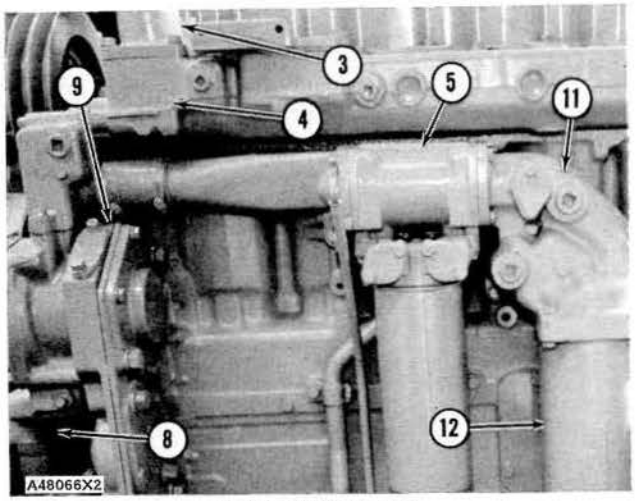

COOLING SYSTEM

3. Inlet line for radiator. 4. Water temperature regulator. 5. Engine oil cooler. 8. Inlet line for water pump. 9. Water pump. 11. Bonnet. 12. Transmission oil cooler.

tors into cylinder head (6). The water directors send the flow of coolant around the valves and the passages for exhaust gases in cylinder head (6). The coolant goes to the front of cylinder head (6). Here water temperature regulator (4) controls the direction of the flow. If the coolant temperature is less than normal for engine operation, water temperature regulator (4) is closed. The only way for the coolant to get out of cylinder head (6) is through internal bypass (10). The coolant from this line goes into water pump (9) which pushes it through the cooling system again. The coolant from internal bypass (10) also works to prevent cavitation (air bubbles) in the coolant. When the coolant gets to the correct temperature, water temperature regulator (4) opens and coolant flow is divided. Most of the coolant goes through the radiator (2) for cooling. The remainder goes through internal bypass (10) to water pump (9). The amount of the two flows is controlled by water temperature regulator (4).

NOTE: The water temperature regulator is an important part of the cooling system. It divides coolant flow between the radiator (2) and the internal bypass (10) as necessary to maintain the correct operating temperature. If the regulator is not installed in the system, there is no mechanical control and most of the coolant will follow the path of least resistance thru the internal bypass (10). This will cause the engine to overheat in hot weather. In cold weather, even the small amount of coolant that goes thru the radiator (2) is too much and the engine will not get to normal operating temperature.

The internal bypass (10) has another function when the cooling system is being filled. It lets the coolant go into cylinder head (6) and cylinder block (7) without going through water pump (9).

Radiator (2) has a pressure relief cap or a relief valve and filler cap. The pressure relief cap or valve keeps the pressure in the cooling system from getting too high when the engine is running. It also lets air come into the system when the pressure in the system is less than atmospheric.

Water Pump

The centrifugal-type water pump has two seals. One prevents leakage of water and the other prevents leakage of lubricant.

An opening in the bottom of the pump housing allows any leakage at the water seal or the rear bearing oil seal to escape.

Fan

The fan is driven by two V-belts, from a pulley on the crankshaft. Belt tension is adjusted by moving the clamp assembly which includes the fan mounting and pulley.

COOLANT FOR AIR COMPRESSOR

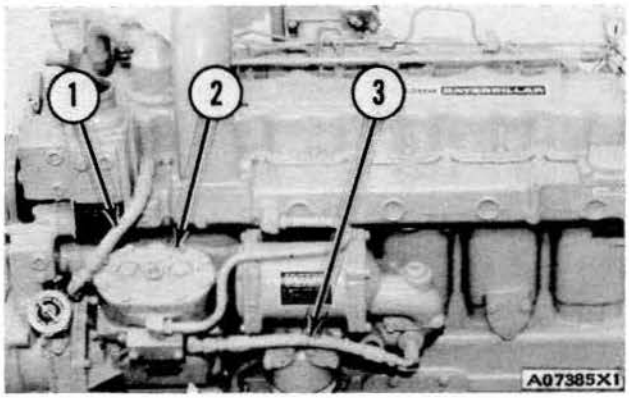

COOLANT FLOW IN AIR COMPRESSOR
(Typical Example)

1. Outlet hose. 2. Air compressor. 3. Inlet hose.

The coolant for the air compressor (2) comes from the cylinder block through hose (3) and into the air compressor. The coolant goes from the air compressor through hose (1) back into the front of the cylinder head.