CLUTCH

CONTENTS

CLUTCH COMPONENTS

MECHANICAL COMPONENTS

The clutch mechanism in AD models with a gas or diesel engine consists of a single, dry-type clutch disc and a diaphragm style clutch cover. A hydraulic linkage is used to engage/disengage the clutch disc and cover.

The transmission input shaft is supported in the crankshaft by a bearing. A sleeve type release bearing is used to operate the clutch cover pressure plate.

The release bearing is operated by a release fork in the clutch housing. The fork pivots on a ball stud mounted inside the housing. The release fork is actuated by a hydraulic slave cylinder mounted in the housing. The slave cylinder is operated by a clutch master cylinder mounted on the dash panel. The cylinder push rod is connected to the clutch pedal.

The clutch disc has cushion springs in the disc hub. The clutch disc facing is riveted to the hub. The facing is made from a non-asbestos material. The clutch cover pressure plate is a diaphragm type with a one-piece spring and multiple release fingers. The pressure plate release fingers are preset during manufacture and are not adjustable.

A 265 mm clutch disc and cover are used in models with a 3.9L engine. A 280 mm clutch disc and cover are used in models with a 5.2L, or 5.9L engine.

A 330 mm clutch disc and cover are used in models equipped with the optional 5.9L Cummins diesel engine. Some diesel models are also equipped with a clutch pedal interlock switch. The switch is in circuit with the starter relay and is actuated by the clutch pedal and push rod. The clutch pedal must be fully depressed in order to start the engine.

HYDRAULIC LINKAGE COMPONENTS

The hydraulic linkage consists of a remote reservoir, clutch master cylinder, clutch slave cylinder and interconnecting fluid lines.

The clutch master cylinder is connected to the clutch pedal and the slave cylinder is connected to the clutch release fork. The master cylinder is mounted on the drivers' side of the dash panel adjacent to the brake master cylinder.

CLUTCH LINKAGE FLUID

The clutch fluid reservoir, master cylinder, slave cylinder and fluid lines are prefilled with fluid at the factory during assembly operations.

The hydraulic system should not require additional fluid under normal circumstances. In fact, **the reservoir fluid level will actually increase as normal clutch wear occurs. For this reason, it is important to avoid overfilling, or removing fluid from the reservoir.**

If inspection or diagnosis indicates additional fluid may be needed, use Mopar brake fluid, or an equivalent meeting SAE and DOT standards J1703 and DOT 3. Do not use any other type of fluid.

CLUTCH COMPONENT LUBRICATION

Proper clutch component lubrication is important to satisfactory operation. The correct lubricant and not overlubricating are equally important. Apply recommended lubricant sparingly to avoid disc and pressure plate contamination.

Clutch and transmission components requiring lubrication are:

- pilot bearing
- release lever pivot ball stud
- release lever contact surfaces
- clutch disc hub splines
- clutch pedal pivot shaft bore
- clutch pedal bushings
- input shaft splines
- input shaft pilot hub
- transmission front bearing retainer slide surface

Do not apply grease to any part of the clutch cover, or disc.

RECOMMENDED LUBRICANTS

Use Mopar multi-purpose grease for the clutch pedal bushings and pivot shaft. Use Mopar high temperature grease (or equivalent) for all other lubrication requirements. Apply recommended amounts and do not overlubricate.

CLUTCH DIAGNOSIS

INDEX

GENERAL DIAGNOSIS INFORMATION

Unless the cause of a clutch problem is obvious, a road test and component inspection will be required for accurate diagnosis.

A road test will help determine the type of fault while component inspection will identify the problem component.

During a road test, drive the vehicle at normal speeds. Shift the transmission through all gear ranges and observe clutch action.

If chatter, grab, slip, or improper release is experienced, remove and inspect the clutch components. However, if the problem is noise or hard shifting, further diagnosis is needed. The transmission or another driveline component may actually be at fault.

Careful observation during a road test will help narrow the problem area.

CLUTCH PROBLEM CAUSES

CONTAMINATION

Fluid contamination is one of the more common causes of clutch malfunctions. Oil, water, or clutch fluid on the clutch contact surfaces will result in faulty operation. The usual result is chatter, slip, or grab.

During inspection, note if any components are contaminated with oil, hydraulic fluid, or water/road splash.

Oil contamination indicates a leak at either the rear main seal or transmission input shaft.

Oil leakage produces a residue of oil on the housing interior and on the clutch cover and flywheel.

Heat buildup caused by slippage between the cover, disc and flywheel, can sometimes bake the oil residue onto the components. The glaze-like residue ranges in color from amber to black.

Road splash contamination means dirt and water are entering the clutch housing due to loose bolts, housing cracks, vent openings, or through the slave cylinder opening. Driving through deep water puddles can force water/road splash into the housing through such openings.

An additional problem caused by water contamination and especially by steam cleaning, involves clutch disc sticking and poor release.

Water and steam vapors can be absorbed by the clutch facing material. If the vehicle sits idle for long periods after water contamination, the force exerted by the pressure plate may cause the disc to bond itself to the flywheel or pressure plate.

Frequently, the only remedy for the above condition is component replacement. To avoid this problem, a vehicle should be driven as soon as possible to heat and dry the clutch components.

Clutch fluid leaks are from a loose or damaged slave cylinder line or connection. However, clutch fluid leaks will usually be noted and corrected before severe contamination occurs.

CLUTCH MISALIGNMENT

Clutch components must be in proper alignment with the crankshaft and transmission input shaft. Misalignment caused by excessive runout or warpage of any clutch component will cause grab, chatter and improper clutch release.

Flywheel Runout

Common causes of runout are heat warping, improper machining, mounting the flywheel on a dirty crankshaft flange, incorrect bolt tightening, or improper seating on the crankshaft flange shoulder.

Very light scratches or surface roughness on the flywheel face can be cleaned up by scuff sanding with 180 grit emery cloth. However, if the surface is warped or severely scored, replace the flywheel.

Do not machine the flywheel. The flywheel face is manufactured with a unique surface contour. Machining would negate this feature and could result in unsatisfactory operation.

Clean the crankshaft flange before mounting the flywheel. Dirt and grease on the flange surface may cock the flywheel causing runout.

Use new bolts when remounting a flywheel and secure the bolts with Mopar Lock And Seal, or Loctite 242. Tighten flywheel bolts to specified torque only. Overtightening could distort the flywheel hub causing runout.

Clutch Cover And Disc Runout

Check the clutch disc before installation. Axial (face) runout of a **new** disc should not exceed 0.5 mm (0.020 in.). Measure runout about 6 mm (1/4 in.) from the outer edge of the disc facing. Obtain another disc if runout is excessive.

Check condition of the clutch before installation. A warped cover or diaphragm spring will cause grab and incomplete release or engagement.

Be careful when handling the cover and disc. Impact can distort the cover, diaphragm spring, release fingers and the hub of the clutch disc.

Use an alignment tool when positioning the disc on the flywheel. The tool prevents accidental misalignment which could result in cover distortion and disc damage.

A frequent cause of clutch cover distortion (and consequent misalignment) is improper bolt tightening. To avoid warping the cover, tighten the bolts alternately (in a diagonal pattern) and evenly (2-3 threads at a time) to specified torque.

Clutch Housing Misalignment And Runout

Clutch housing alignment is important to proper operation. The housing bore maintains alignment between the crankshaft and transmission input shaft.

Misalignment can cause noise, incomplete clutch release and chatter. It can also result in premature wear of the pilot bearing, cover release fingers and clutch disc. In severe cases, misalignment can also cause premature wear of the transmission input shaft and bearing.

Housing face misalignment is generally caused by incorrect seating on the engine or transmission, loose housing bolts, missing alignment dowels or housing damage. Infrequently, misalignment may also be caused by housing mounting surfaces that are not parallel.

If housing misalignment is suspected, housing bore and face runout can be checked with a dial indicator as described in the following two procedures:

MEASURING CLUTCH HOUSING BORE RUNOUT

(1) Remove the clutch housing and strut.

(2) Remove the clutch cover and disc.

(3) Replace one of the flywheel bolts with a 7/16-20 threaded rod that is 10 in. (25.4 cm) long (Fig. 1). The rod will be used to mount the dial indicator.

(4) Remove the release fork from the clutch housing.

(5) Reinstall the clutch housing. Tighten the housing bolts nearest the alignment dowels first.

(6) Mount the dial indicator on the threaded rod and position the indicator plunger on the surface of the clutch housing bore (Fig. 2).

(7) Rotate the crankshaft until the indicator plunger is at the top center of the housing bore. Zero the indicator at this point.

(8) Rotate the crankshaft and record the indicator readings at eight points (45° apart) around the bore (Fig. 3). Repeat the measurement at least twice for accuracy.

(9) Subtract each reading from the one 180° opposite to determine magnitude and direction of runout. Refer to Figure 3 and following example.

Bore runout example:

0.000 - (-0.007) = 0.007 in.

+0.002 - (-0.010) = 0.012 in.

+0.004 - (-0.005) = 0.009 in.

-0.001 - (+0.001) = -0.002 in. (= 0.002 inch)

In the above example, the largest difference is 0.012 in. and is called the total indicator reading (TIR). This means that the housing bore is offset from the crankshaft centerline by 0.006 in. (which is 1/2 of 0.012 in.).

On gas engines, the acceptable maximum TIR for housing bore runout is 0.010 inch. If measured TIR is more than 0.010 in. (as in the example), bore runout will have to be corrected with offset dowels. Offset dowels are available in 0.007, 0.014 and 0.021 in. sizes for this purpose (Fig. 4). Refer to Correcting Housing Bore Runout for dowel installation.

On diesel engines, the acceptable maximum TIR for housing bore runout is 0.015 inch. However, unlike gas engines, offset dowels are not available to correct runout on diesel engines. If bore runout exceeds the stated maximum on a diesel engine, it may be necessary to replace either the clutch housing, or transmission adapter plate.

CORRECTING CLUTCH HOUSING BORE RUNOUT (GAS ENGINE ONLY)

On gas engine vehicles, clutch housing bore runout is corrected with offset dowels. However, if bore runout exceeds 0.015 in. TIR on a diesel equipped model, the clutch housing, or transmission adapter plate may have to be replaced. Offset dowels are not available for diesel models.

The dial indicator reads positive when the plunger moves inward (toward indicator) and negative when it moves outward (away from indicator). As a result, the lowest or most negative reading determines the direction of housing bore offset (runout).

In the sample readings shown in Figure 3 and in step (7) above, the bore is offset toward the 0.010 inch reading. To correct this, remove the housing and original dowels. Then install the new offset dowels in the direction needed to center the bore with the crankshaft centerline.

In the example, TIR was 0.012 inch. The dowels needed for correction would have an offset of 0.007 in. (Fig. 4).

Install the dowels with the slotted side facing out so they can be turned with a screwdriver. Then install the housing, remount the dial indicator and check bore runout again. Rotate the dowels until the TIR is less than 0.010 in. if necessary.

If a TIR of 0.053 in. or greater is encountered, it may be necessary to replace the clutch housing.

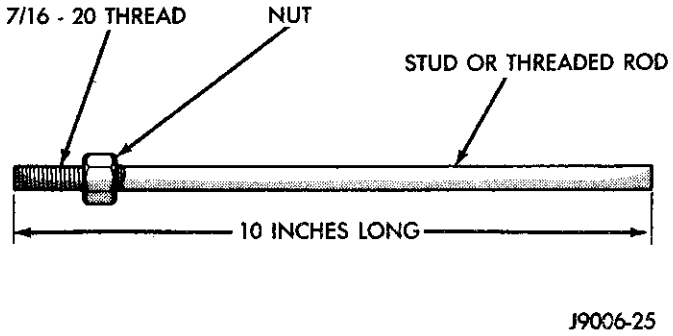

Fig. 1 Dial Indicator Mounting Stud Or Rod

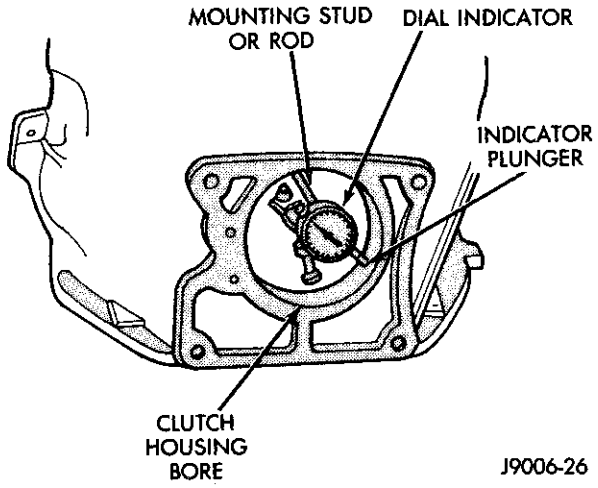

Fig. 2 Checking Clutch Housing Bore Runout

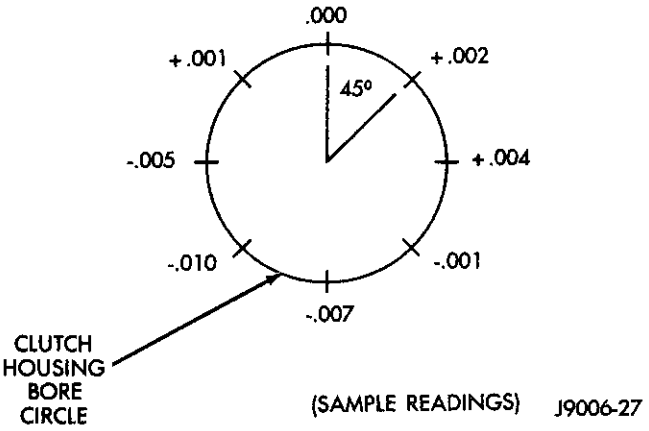

Fig. 3 Housing Bore Measurement Points And Sample Readings

MEASURING CLUTCH HOUSING FACE RUNOUT (GAS AND DIESEL ENGINES)

(1) Reposition the dial indicator plunger on the housing face (Fig. 5). Place the indicator plunger at the rim of the housing bore as shown.

(2) Rotate the crankshaft until the indicator plunger is at the 10 O'clock position on the bore. Then zero the dial indicator.

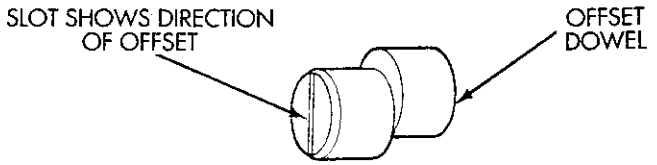

DOWEL SELECTION

TIR VALUE	OFFSET DOWEL REQUIRED
0.011 - 0.021 inch	0.007 inch
0.022 - 0.035 inch	0.014 inch
0.036 - 0.052 inch	0.021 inch

J9206-7

Fig. 4 Housing Bore Alignment Dowel Selection

(3) Measure and record face runout at four points 90° apart around the housing face (Fig. 6). Perform the measurement at least twice for accuracy.

(4) Subtract the lowest reading from the highest to determine total runout. As an example, refer to the sample readings shown in Figure 6. If the low reading was **minus** 0.004 in. and the highest reading was **plus** 0.009 in., total runout is actually 0.013 inch.

(5) Total allowable face runout is 0.010 inch. If runout exceeds this figure, runout will have to be corrected. Refer to Correcting Clutch Housing Face Runout.

CORRECTING CLUTCH HOUSING FACE RUNOUT

Housing face runout, on gas or diesel engines, can be corrected by installing shims between the clutch housing and transmission (Fig. 7). The shims can be made from shim stock or similar materials of the required thickness.

As an example, assume that face runout is the same as shown in Figure 6 and in step (4) above. In this case, three shims will be needed. Shim thicknesses should be 0.009 in. (at the 0.000 corner), 0.012 in. (at the -0.003 corner) and 0.013 in. (at the -0.004 corner).

After installing the clutch assembly and housing, tighten the housing bolts nearest the alignment dowels first.

Clutch housing preferred bolt torques are:

- 41 N•m (30 ft. lbs.) for 3/8 in. diameter bolts
- 68 N•m (50 ft. lbs.) for 7/16 in. diameter bolts
- 47 N•m (35 ft. lbs.) for diesel clutch housing bolts

During final transmission installation, install the shims between the clutch housing and transmission at the appropriate bolt locations.

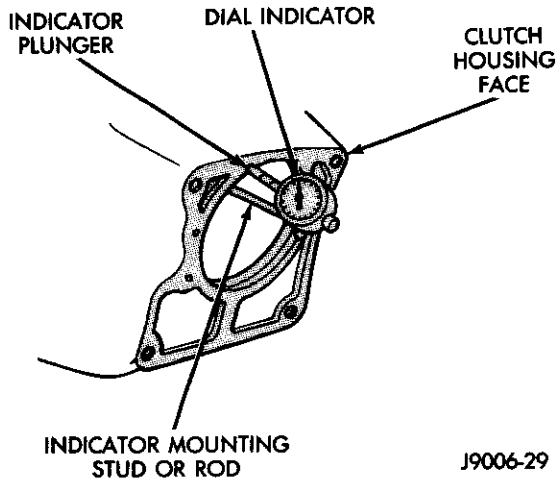

Fig. 5 Measuring Clutch Housing Face Runout

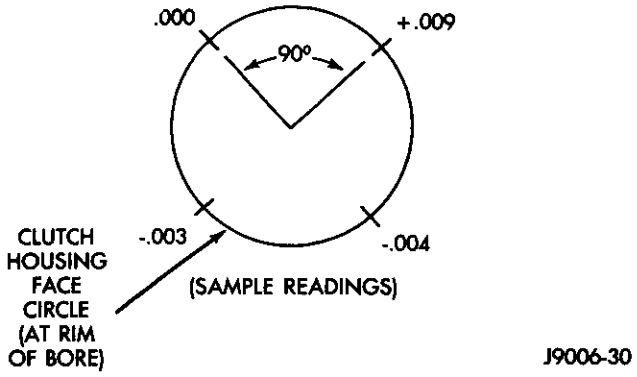

Fig. 6 Housing Face Measurement Points And Sample Readings

INSTALLATION METHODS AND PARTS USAGE

Distortion of clutch components during installation and the use of non-standard components are additional causes of clutch malfunction.

Improper clutch cover bolt tightening can distort the cover. The usual result is clutch grab, chatter and rapid wear. Tighten the cover bolts as described in the Clutch Service section.

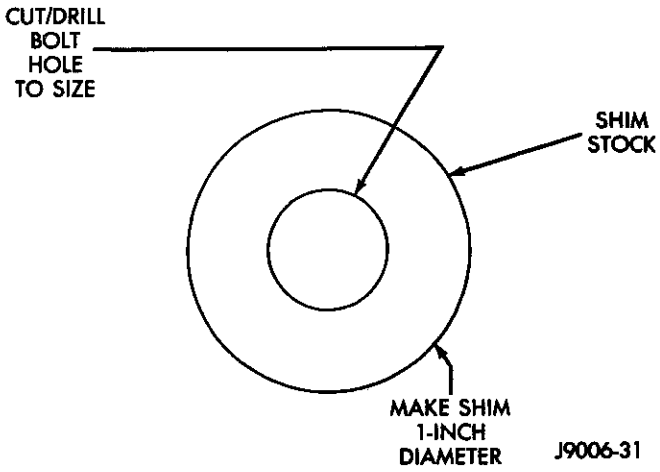

Fig. 7 Housing Face Alignment Shims

Improperly seated flywheels and clutch housings are other causes of clutch failure. Improper seating will produce misalignment and subsequent clutch problems.

Tighten the clutch housing bolts to proper torque before installing any struts. Also be sure the alignment dowels are in place and seated in the block and housing beforehand.

The use of non-standard or low quality parts can also lead to problems and wear. Use the recommended factory quality parts to avoid comebacks.

INSPECTION AND DIAGNOSIS CHARTS

The clutch inspection chart (Fig. 8) outlines items to be checked before and during clutch installation. Use the chart as a check list to help avoid overlooking potential problem sources during service operations.

The diagnosis charts describe common clutch problems, causes and correction. Fault conditions are listed at the top of each chart. Conditions, causes and corrective action are outlined in the indicated columns.

The charts are provided as a convenient reference when diagnosing faulty clutch operation.

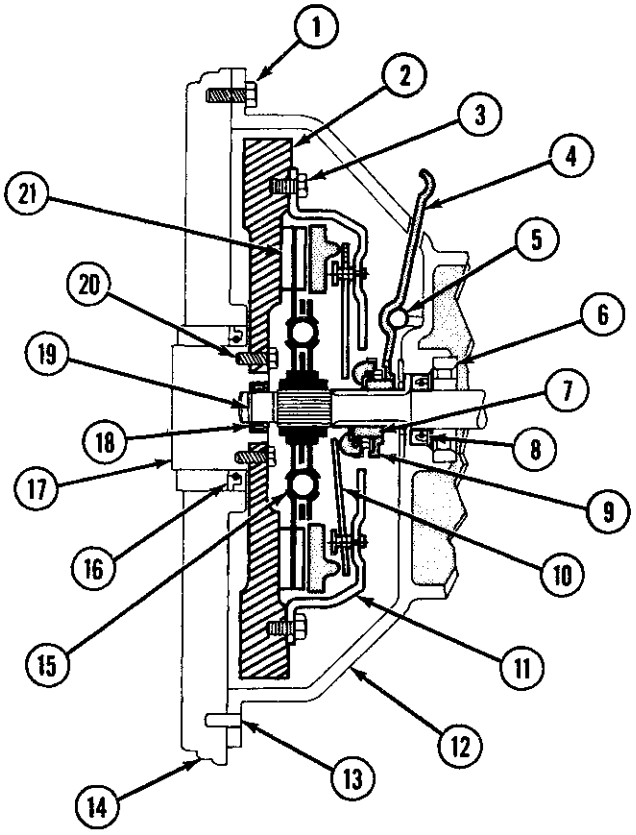

1 Check clutch housing bolts. Tighten if loose. Be sure housing is fully seated on engine block.

2 Check flywheel condition. Scuff sand flywheel face to remove glaze. Clean surface with a wax and grease remover afterward. Replace flywheel if severely scored, worn or cracked. Secure flywheel with new bolts (if removed). Do not reuse old bolts. Use Lock and Seal on bolts.

3 Tighten clutch cover bolts 2-3 threads at a time, alternately and evenly (in a diagonal pattern) to specified torque. Failure to do so could warp the cover.

4 Check release fork. Replace fork if distorted or worn. Make sure ball stud and release bearing contact surfaces are lubricated.

5 Check release fork pivot. Be sure pivot is tight and ball end is lubricated.

6 Transmission input shaft bearing will cause noise, chatter, or improper release if damaged. Check condition before installing transmission.

7 Inspect release bearing slide surface of trans. front bearing retainer. Surface should be smooth, free of nicks, scores. Replace retainer if necessary. Lubricate slide surface before installing release bearing.

8 Check input shaft seal if clutch cover and disc were oil covered. Replace seal if worn, or cut.

9 Do not replace release bearing unless actually faulty. Replace bearing only if seized, noisy, or damaged.

10 Check clutch cover diaphragm spring and release fingers. Replace cover if spring or fingers are bent, warped, broken, cracked. Do not tamper with factory clutch spring setting. Clutch problems will result.

11 Check condition of clutch cover. Replace clutch cover if plate surface is deeply scored, warped, worn, or cracked. Be sure cover is correct size and properly aligned on disc and flywheel.

12 Inspect clutch housing. Be sure alignment dowels are in position and bolts are tight. Replace housing if cracked, or damaged. If clutch problems ocurred, check runout, to be sure housing is square with flywheel and transmission input shaft.

13 Verify that housing alignment dowels are in position before installing housing.

14 Clean engine block surface before installing clutch housing. Dirt, grime can produce misalignment.

15 Make sure side of clutch disc marked "flywheel side" is toward flywheel.

16 Check rear main seal if clutch disc and cover were oil covered. Replace seal if necessary.

17 Check crankshaft flange (if flywheel is removed). Be sure flange is clean and flywheel bolt threads are in good condition.

18 Check pilot bearing. Replace bearing if damaged. Lube with high temp. Grease before installation.

19 Check transmission input shaft. Clutch disc must slide freely on shaft splines. Lightly grease splines before installation. Replace shaft if splines or pilot bearing hub are damaged.

20 Check flywheel bolt torque. If bolts are loose, replace them. Use Mopar Lock and Seal to secure new bolts.

21 Check clutch disc facing. Replace disc if facing is charred, scored, flaking off, or worn. Also check runout of new disc. Runout should not exceed 0.5 mm (0.02 in.).

J9206-9

Fig. 8 Clutch Inspection Points

CLUTCH SLIPS

Condition Found	Cause	Correction
1. Disc facing worn out.	a) Normal wear. b) Driver frequently "rides" (slips) clutch. Results in rapid wear overheating. c) Insufficient clutch cover diaphragm spring tension.	Replace clutch disc. Also replace cover if spring is weak or pressure plate surface is damaged.
2. Clutch disc facing contaminated with oil, grease, or clutch fluid.	a) Leak at rear main seal or at transmission input shaft seal. b) Excessive amount of grease applied to input shaft splines. c) Road splash, water entering housing. d) Slave cylinder leaking.	a), b), c), d) Replace leaking seals. Apply less grease to input shaft splines. Replace clutch disc (do not clean and reuse). Clean clutch cover and reuse only if cover is in good condition. Replace slave cylinder if leaking.
3. Clutch is running partially disengaged.	Release bearing sticking–binding. Does not return to normal running position.	Verify that bearing is actually binding, then replace bearing and transmission front bearing retainer if sleeve surface is damaged.
4. Flywheel height incorrect.	Flywheel surface improperly machined. Too much stock removed or surface is tapered.	Replace flywheel.
5. Wrong disc or pressure plate installed.	Incorrect parts order or model number.	Replace with correct parts. Compare old and new parts before installation.
6. Clutch disc, cover and/or diaphragm spring, warped, distorted.	a) Rough handling (impact) bent cover, spring, or disc. b) Incorrect bolt tightening sequence and method caused warped cover.	Install new disc or cover as needed. Follow installation/tightening instructions.
7. Facing on flywheel side of disc torn, gouged, worn.	Flywheel surface scored and nicked.	Reduce scores and nicks by sanding or surface grinding. Replace flywheel if scores–nicks are deeper than .002-.004 inch.
8. Clutch disc facing burnt (charred). Flywheel and cover pressure plate surfaces heavily glazed.	a) Frequent operation under high loads or hard acceleration conditions. b) Driver frequently "rides" (slips) clutch. Results in rapid wear and overheating of disc and cover.	Scuff sand flywheel. Replace clutch cover and disc. Alert driver to problem cause.

IMPROPER CLUTCH RELEASE

Condition Found	Cause	Correction
1. Clutch disc warped.	New disc not checked for axial runout before installation.	Replace disc. Be sure runout of new disc is less than .5 mm (.020 in.).
2. Clutch disc binds on input shaft splines.	a) Clutch disc hub splines damaged during installation. b) Input shaft splines rough, damaged. c) Corrosion, rust formations on splines of disc and input shaft.	Clean, smooth and lubricate disc and shaft spines. Replace disc and/or input shaft if splines are severely damaged.
3. Clutch disc rusted to flywheel and/or pressure plate.	Occurs in vehicles stored, or not driven for extended periods of time. Also occurs after steam cleaning if vehicle is not used for extended period.	Remove clutch cover and disc. Sand rusted surfaces clean with 180 grit paper. Replace disc cover, and flywheel if corrosion is severe.
4. Clutch disc facing sticks to flywheel.	Vacuum may form in pockets over rivet heads in clutch disc. Occurs as clutch cools down after use.	Drill 1/16 inch diameter hole through rivets and scuff sand disc facing with 180 grit paper.
5. Clutch disc too thick.	Wrong disc installed.	Replace disc.
6. Pilot bushing seized or loose.	a) Bushing cocked during installation. b) Bushing defective. c) Bushing not lubricated. d) Clutch misalignment.	a), b), c), d) Lubricate and install new bushing. Check and correct any misalignment.
7. Clutch will not disengage properly.	a) Low clutch fluid level. b) Clutch cover loose. c) Wrong clutch disc. d) Disc bent, distorted during installation. e) Clutch cover diaphragm spring bent or wraped during transmission instalation. f) Clutch disc installed backwards. g) Release fork bent or fork pivot is loose or damaged. h) Clutch master or slave cylinder fault.	a) Top off reservoir and check for leaks. b) Tighten bolts. c) Install correct disc. d) Repalce disc. e) Replace cover. f) Remove and reinstall disc correctly. Be sure disc side marked "to flywheel" is actually toward flywheel. g) Replace fork and pivot if worn or damaged. h) Replace master and slave cylinder as assembly.

J9006-22

CLUTCH GRAB/CHATTER

Condition Found	Cause	Correction
1. Clutch disc facing covered with oil, grease, or clutch fluid.	a) Oil leak at rear main or input shaft seal. b) Too much grease applied to splines or disc and input shaft.	a) Correct leak and replace disc (do not clean and reuse the disc). b) Apply lighter grease coating to splines and replace disc (do not clean and reuse the disc).
2. Clutch disc and/or cover warped, or disc facings exhibit unusual wear or appear to be wrong type.	Incorrect or substandard parts.	Replace disc and/or cover with correct parts.
3. Clutch master or slave cylinder plunger dragging–binding.	a) Master or slave cylinder components worn or corroded.	a) Replace both cylinders as assembly (and reservoir).
4. No fault found with clutch components.	a) Problem actually related to suspension or driveline component. b) Engine related problem.	a) Further diagnosis required. Check engine/transmission mounts, propeller shafts and U-joints, tires, suspension attaching parts and other driveline components as needed. b) Check EFI and igniton systems.
5. Partial engagement of clutch disc (one side worn–opposite side glazed and lightly worn).	a) Clutch pressure plate position setting incorrect or modified. b) Clutch cover, spring, or release fingers bent, distorted (rough handling, improper assembly). c) Clutch disc damaged or distorted. d) Clutch misalignment.	a) Replace clutch cover and disc. b) Replace clutch cover and disc. c) Replace disc. d) Check alignment and runout of flywheel, disc, or cover and/or clutch housing. Correct as necessary.

J9006-23

CLUTCH NOISE

Condition Found	Cause	Correction
1. Clutch components damaged or worn out prematurely.	Incorrect or sub-standard clutch parts.	Replace with parts of correct type and quality.
2. Pilot bearing damaged.	a) Bearing cocked during installation. b) Bearing not lubricated prior to installation. c) Bearing defect. d) Clutch misalignment.	a), b), c) Replace bearing. Be sure it is properly seated and lubricated before installing clutch. d) Check and correct misalignment caused by excessive runout of flywheel, disc, cover or clutch housing. Replace input shaft if bearing hub is damaged.
3. Loose components.	Attaching bolts loose at flywheel, cover, or clutch housing.	Tighten bolts to specified torque. Replace any clutch bolts that are damaged.
4. Components appear overheated. Hub of disc cracked or torsion damper springs are distorted or broken.	Frequent high load, full throttle operation.	Replace parts as needed. Alert driver to condition causes.
5. Contact surface of release bearing damaged.	a) Clutch cover incorrect, or release fingers are bent or distorted causing damage. b) Release bearing defect. c) Release bearing misaligned.	a) Replace clutch cover and bearing. b) Replace bearing. c) Check and correct runout of clutch components. Check front bearing retainer sleeve surface. Replace if damaged.
6. Release bearing is noisy.	Release bearing defect.	Replace bearing.
7. Clutch pedal squeak.	a) Pivot pin loose. b) Pedal bushings worn out or cracked.	Tighten pivot pin. Replace bushings if worn or damaged. Lubricate pin and bushings with silicone base lubricator chassis grease.

CLUTCH SERVICE

INDEX

CLUTCH COVER AND DISC REMOVAL—ALL

(1) Raise vehicle.

(2) Remove transmission and remove transfer case if equipped. Refer to Group 21 for procedures.

(3) Remove clutch housing from engine.

(4) Support engine with wood block and adjustable jack stand (Fig. 1). Supporting engine is necessary to avoid undue strain on engine mounts.

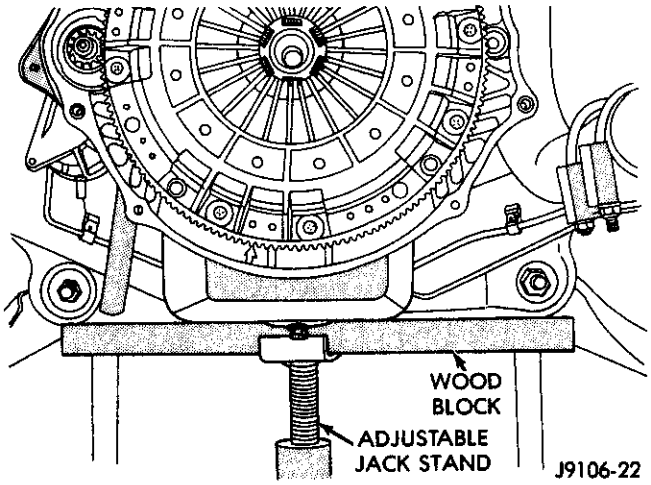

Fig. 1 Supporting Engine With Jack Stand And Wood Block (Diesel Model Shown)

(5) If clutch cover will be reused, mark position of cover on flywheel with paint or scriber (Fig. 2).

(6) Insert clutch alignment tool in clutch disc and into pilot bushing. Tool will hold disc in place when cover bolts are removed.

(7) If clutch cover will be reused, loosen cover bolts evenly, only few threads at a time, and in a diagonal pattern (Fig. 3). This relieves cover spring tension evenly to avoid warping.

(8) Remove cover bolts completely and remove cover, disc and alignment tool.

CLUTCH COVER AND DISC INSTALLATION—ALL

(1) Check runout and free operation of new clutch disc:

(a) Install disc on transmission input shaft splines and check fit. Disc should slide freely on splines.

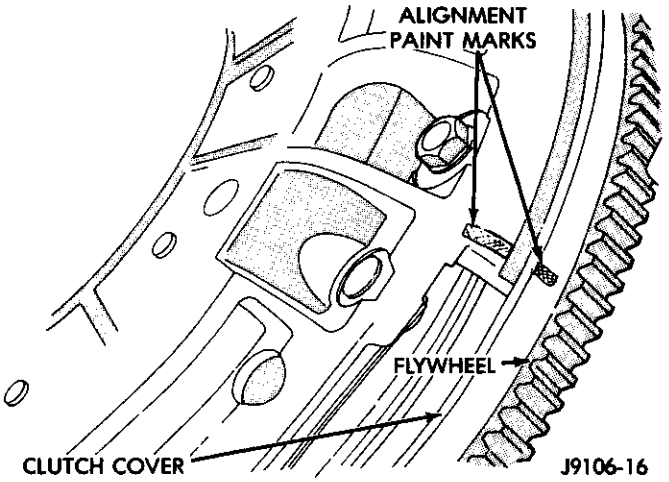

Fig. 2 Marking Clutch Cover Position

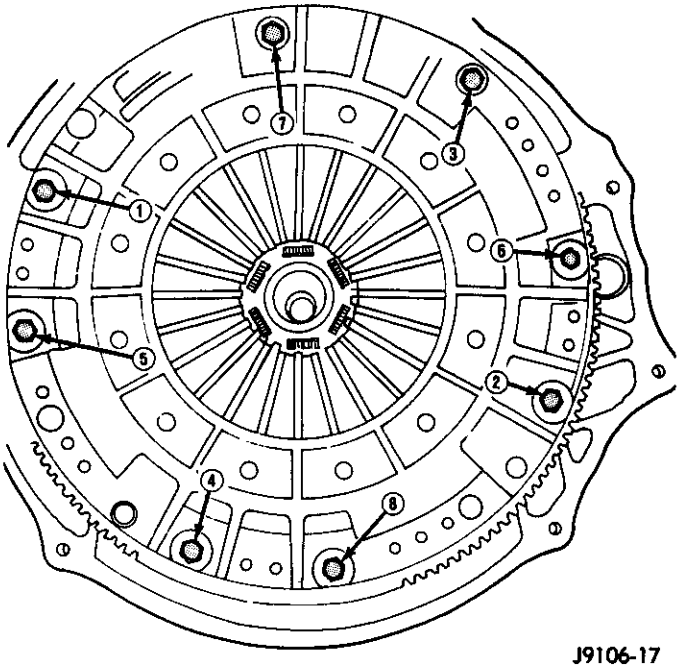

Fig. 3 Clutch Cover Bolt Loosening/Tightening Pattern

(b) Leave disc on shaft and check disc runout with dial indicator.

(c) Position indicator plunger about 1/4 inch from outer edge of disc facing.

(d) Runout should not exceed 0.5 mm (0.020 in.). Obtain another clutch disc if runout exceeds this limit.

(2) Lubricate crankshaft pilot bearing with Mopar high temperature bearing grease.

(3) Insert clutch alignment tool in clutch disc hub.

(4) Verify that clutch disc is positioned correctly. Side of hub marked "Flywheel Side" should face flywheel (Fig. 4). If disc is not marked, position raised side of disc hub toward clutch cover and transmission.

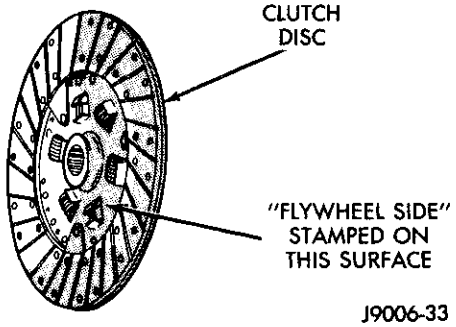

Fig. 4 Clutch Disc Position (Typical)

(5) Insert alignment tool in pilot bearing and position disc on flywheel surface (Fig. 5).

(6) Position clutch cover over disc and onto flywheel (Fig. 5).

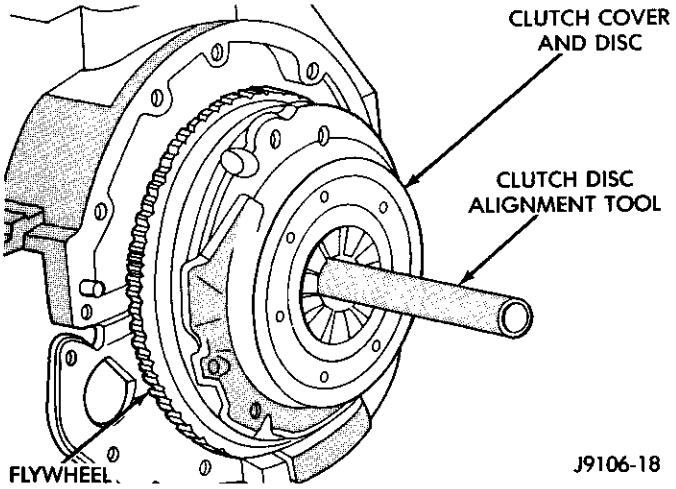

Fig. 5 Clutch Disc And Cover Alignment/Installation

(7) Align and hold clutch cover in position and install cover bolts finger tight.

(8) Tighten cover bolts evenly and a few threads at a time. **Cover bolts must be tightened evenly and to specified torque to avoid distorting cover.**

- Tighten 5/16 in. diameter bolts to 23 N•m (17 ft. lbs.)
- Tighten 3/8 in. diameter bolts to 41 N•m (30 ft. lbs.).

(9) Remove release lever and release bearing from clutch housing. Apply Mopar high temperature bearing grease to bore of release bearing, release lever contact surfaces and release lever pivot stud (Fig. 6).

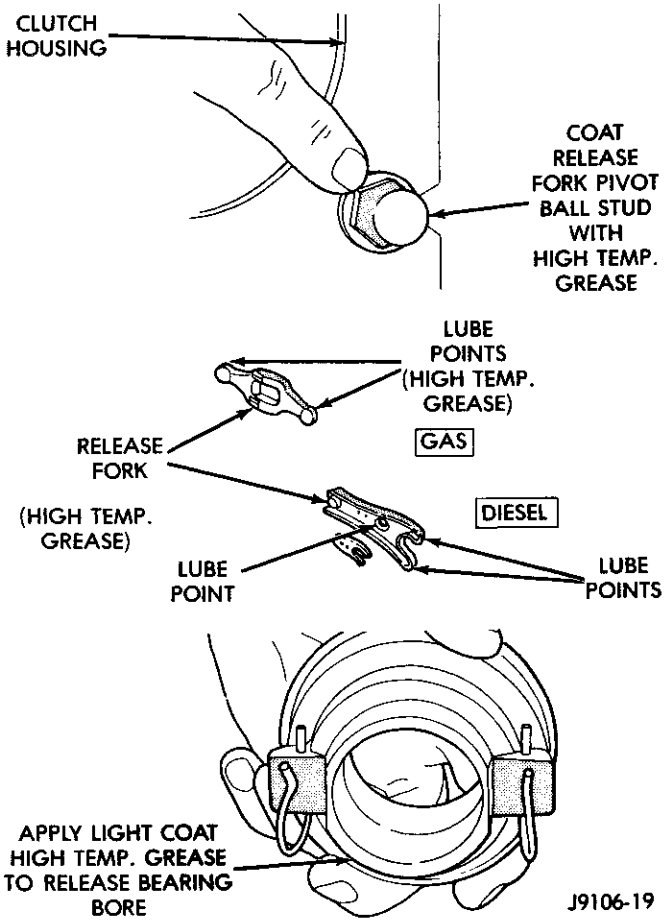

Fig. 6 Clutch Release Component Lubrication Points

(10) Apply light coat of Mopar high temperature bearing grease to splines of transmission input shaft and to release bearing slide surface of transmission front bearing retainer (Fig. 7). **Do not overlubricate shaft splines. Grease contamination of disc will result.**

(11) Install release lever and bearing in clutch housing.

(12) Install clutch housing (Figs. 8 and 9). Be sure housing is properly seated on alignment dowels before tightening housing bolts.

(13) Install transmission/transfer case.

(14) Check fluid level in clutch master cylinder.

CLUTCH HOUSING REMOVAL

(1) Raise vehicle and remove transmission and transfer case if equipped.

(2) Remove clutch housing bolts and remove housing from engine (Figs. 8 and 9).

(3) Clean housing mounting surface of engine block with wax and grease remover.

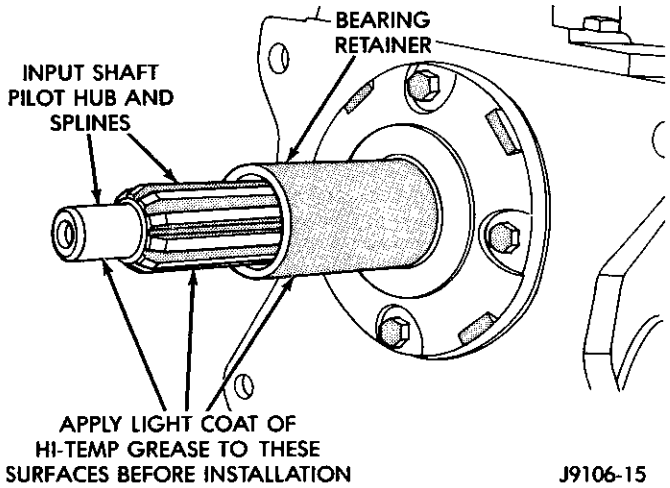

Fig. 7 Input Shaft Lubrication Points (Typical)

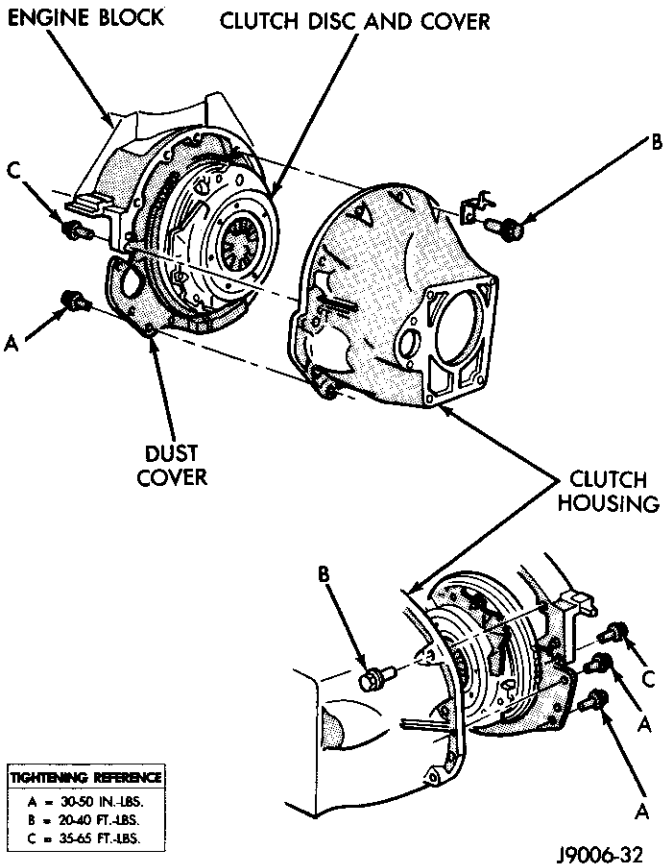

Fig. 8 Clutch Housing Installation—Gas Engine

(4) Verify that clutch housing alignment dowels are in good condition and properly seated.

(5) Transfer slave cylinder, release fork and boot, fork pivot stud and wire/hose brackets to new housing.

CLUTCH HOUSING INSTALLATION

(1) Lubricate release fork and pivot contact surfaces with Mopar High Temperature wheel bearing grease before installation.

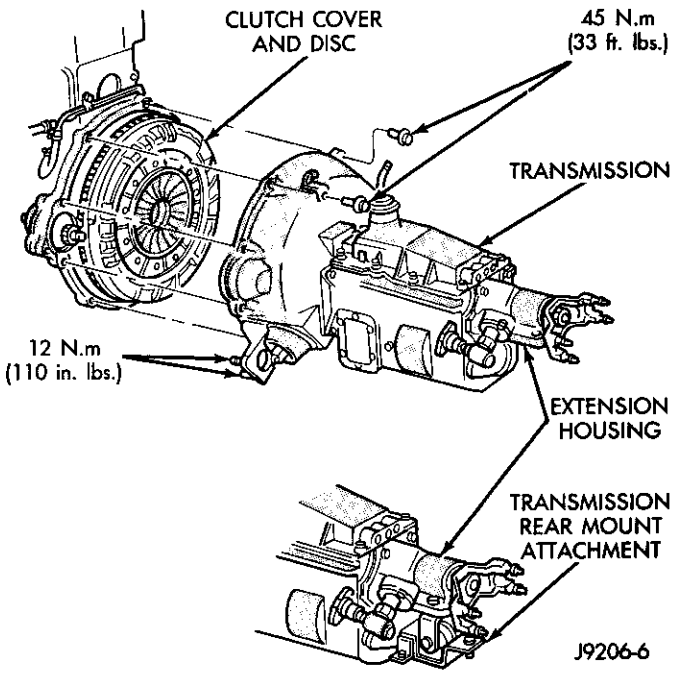

Fig. 9 Clutch Housing/Transmission Installation—Diesel Engine

(2) Align and install clutch housing on transmission. Tighten housing bolts closest to alignment dowels first and to torque values indicated (Figs. 8 and 9).

(3) Install transmission-to-engine strut after installing clutch housing. Tighten bolt attaching strut to clutch housing first and engine bolt last.

(4) Install transmission and transfer case if equipped. Refer to procedure in Group 21.

RELEASE BEARING REPLACEMENT

(1) Remove transmission.

(2) On models with gas engine and new style release fork, remove clutch housing for access to release fork, pivot stud and release bearing retainer springs.

(3) Disconnect release bearing from release fork and remove bearing (Fig. 10).

(4) Inspect bearing slide surface on transmission front bearing retainer. Replace retainer if slide surface is scored, worn or cracked.

(5) Inspect release lever and pivot stud. Be sure stud is secure and in good condition. Be sure lever is not distorted or worn. Replace release lever retainer spring if bent or damaged.

(6) Lubricate crankshaft pilot bearing, input shaft splines, bearing retainer slide surface, lever pivot ball stud and release lever pivot surface with Mopar high temperature bearing grease.

(7) Install release lever and release bearing. Be sure lever and bearing are properly secured.

(8) Install clutch housing, if removed.