# CRANKCASE COMBINATION

Apply a light, but through, coating of liquid sealant to the crankcase mating surface except to the main bearing journal bolt (lower crankcase bolt, 9 mm) area and the oil passage area as shown.

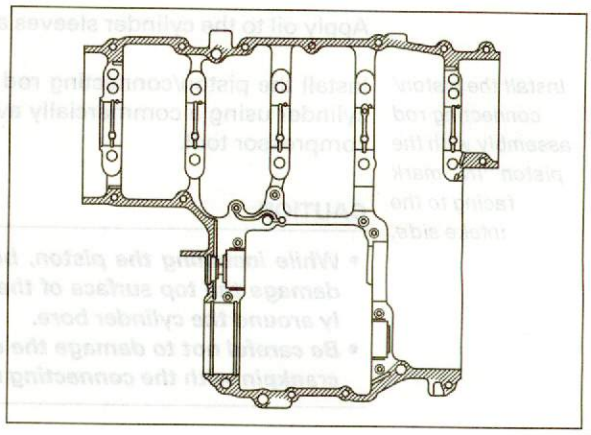

Install the three dowel pins.
Install oil orifices aligning their cut-out with the groove in the upper crankcase.

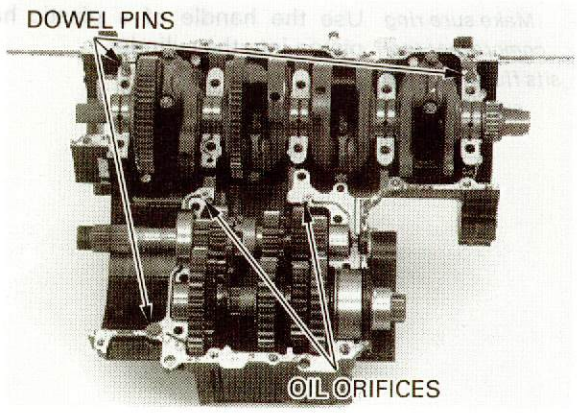


Install the lower crankcase onto the upper crankcase.
Clean the crankcase 9 mm bolts thoroughly with solvent and blow them dry.
Apply clean engine oil to the 9 mm bolt threads and seating surface and install them.

Loosely install all the lower crankcase bolts.
Make sure the upper and lower crankcase are seated securely.

From the inside to outside, tighten the lower crankcase 9 mm bolts in a crisscross pattern in 2–3 steps.

NOTE:

Tighten the 9 mm bolts in numerical order as shown in the illustration.

**TORQUE:** 37 N·m (3.8 kgf·m , 27 lbf·ft)

Tighten the 10 mm bolt, and then the 6 mm bolts and 7 mm bolts.

**TORQUE:** **10 mm bolt:** 39 N·m (4.0 kgf·m , 29 lbf·ft)
**7 mm bolt:** 18 N·m (1.8 kgf·m , 13 lbf·ft)
**6 mm bolt:** 12 N·m (1.2 kgf·m , 9 lbf·ft)

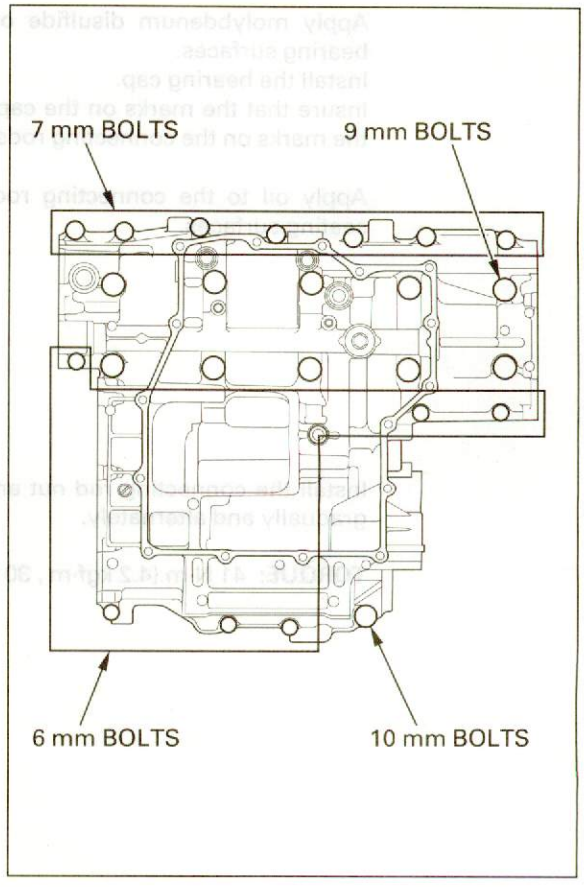

Install the upper crankcase 8 mm bolts and sealing washers.

NOTE:

The sealing washer locations are indicated on the upper crankcase using the "△" mark.

Tighten the 8 mm bolts to the specified torque.

**TORQUE:** 25 N·m (2.5 kgf·m , 18 lbf·ft)

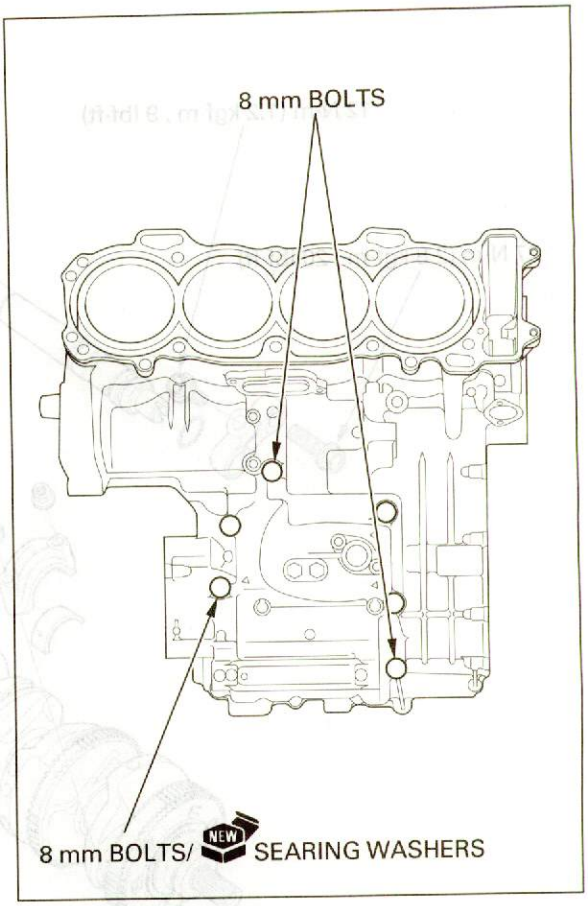


Install the new O-ring and sealing plug.

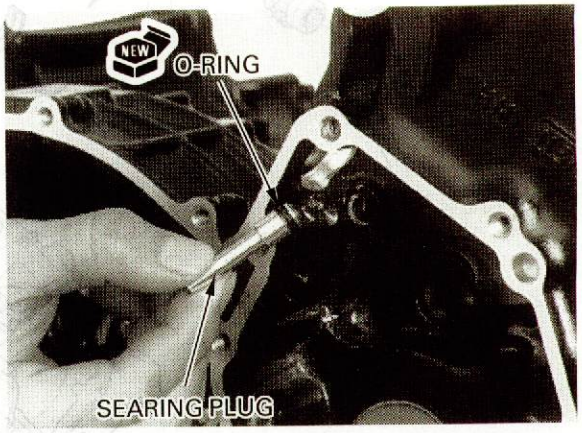

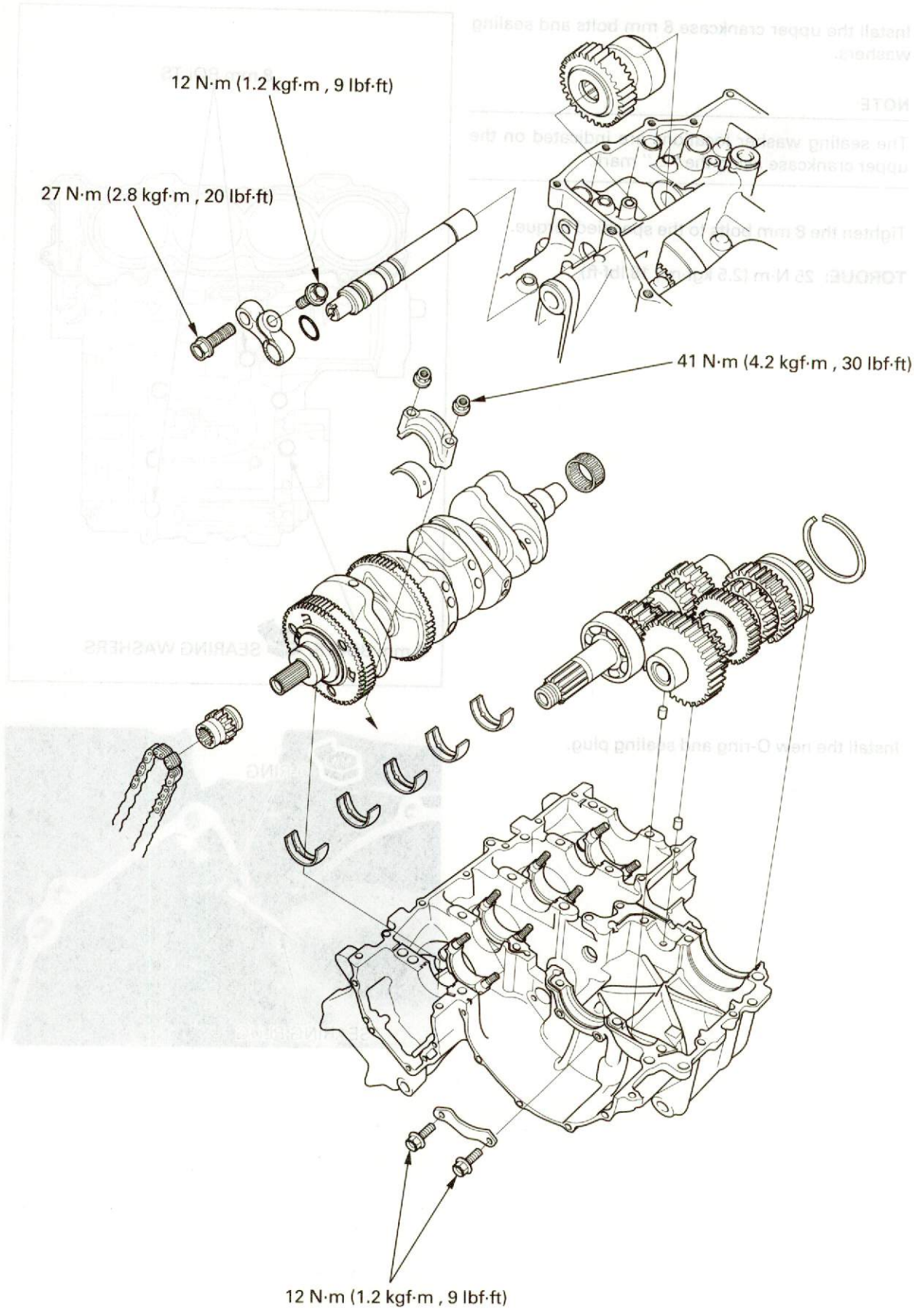
12 N·m (1.2 kgf·m , 9 lbf·ft)
27 N·m (2.8 kgf·m , 20 lbf·ft)
41 N·m (4.2 kgf·m , 30 lbf·ft)
12 N·m (1.2 kgf·m , 9 lbf·ft)

# 12. CRANKSHAFT/TRANSMISSION/BALANCER



## SERVICE INFORMATION

### GENERAL

- The crankcase must be separated to service the crankshaft, transmission and balancer. Refer to section 11 for crankcase separation/assembly.
- Be careful not to damage the crankshaft main journal and journal bearing while removing or installing the crankshaft.
- Mark and store the disassembled parts to ensure that they are installed in their original locations.
- Mark and store the bearing inserts to ensure that the parts are in their correct locations during reassembly. If the inserts are improperly installed, they will block the oil hole, causing insufficient lubrication and eventual engine seizure.
- The main journal bearing inserts are a select fit and are identified by color codes. Select replacement bearings from the code tables. After installing new bearings, recheck them with a plastigauge to verify clearance. Apply molybdenum disulfide oil to the main journal during assembly.

### SPECIFICATIONS

Unit: mm (in)

| ITEM | | | STANDARD | SERVICE LIMIT |
|---|---|---|---|---|
| Crankshaft | Side clearance | | 0.05 – 0.20 (0.002 – 0.008) | 0.30 (0.012) |
| | Runout | | ——— | 0.30 (0.012) |
| | Main journal oil clearance | | 0.017 – 0.035 (0.0007 – 0.0014) | 0.045 (0.0018) |
| Transmission | Gear I.D. | M4, M5 | 31.000 – 31.025 (1.2205 – 1.2215) | 31.04 (1.222) |
| | | C1 | 26.000 – 26.021 (1.0236 – 1.0244) | 26.04 (1.025) |
| | | C2, 3 | 33.000 – 33.025 (1.2992 – 1.3002) | 33.04 (1.301) |
| | Bushing O.D. | M4, M5 | 30.950 – 30.975 (1.2185 – 1.2195) | 30.93 (1.218) |
| | | C2 | 32.955 – 32.980 (1.2974 – 1.2984) | 32.93 (1.296) |
| | | C3, distance collar | 32.950 – 32.975 (1.2972 – 1.2982) | 32.93 (1.296) |
| | Bushing I.D. | M4 | 27.985 – 28.006 (1.1018 – 1.1026) | 28.02 (1.103) |
| | | C2 | 29.985 – 30.006 (1.1805 – 1.1813) | 30.02 (1.182) |
| | Gear-to-bushing clearance | M4, M5 | 0.020 – 0.062 (0.0008 – 0.0024) | 0.10 (0.004) |
| | | C2 | 0.020 – 0.070 (0.0008 – 0.0028) | 0.11 (0.004) |
| | | C3 | 0.025 – 0.075 (0.0010 – 0.0030) | 0.11 (0.004) |
| | Mainshaft O.D. | M4 | 27.967 – 27.980 (1.1011 – 1.1016) | 27.957 (1.1007) |
| | | Clutch outer guide | 27.980 – 27.993 (1.1016 – 1.1021) | 27.970 (1.1012) |
| | Countershaft O.D. | C2 | 29.967 – 29.980 (1.1798 – 1.1803) | 27.957 (1.1007) |
| | Bushing-to-shaft clearance | M4 | 0.005 – 0.039 (0.0002 – 0.0015) | 0.08 (0.003) |
| | | C2 | 0.005 – 0.039 (0.0002 – 0.0015) | 0.08 (0.003) |

## TORQUE VALUES

| | | |
|---|---|---|
| Connecting rod nut | 41 N·m (4.2 kgf·m , 30 lbf·ft) | Apply oil to the threads and seating surface |
| Mainshaft bearing set plate bolt | 12 N·m (1.2 kgf·m , 9 lbf·ft) | Apply a locking agent to the threads |
| Balancer shaft holder flange bolt | 27 N·m (2.8 kgf·m , 20 lbf·ft) | |
| Balancer shaft pinch bolt | 12 N·m (1.2 kgf·m , 9 lbf·ft) | |

## TOOLS

| | |
|---|---|
| Driver, 40 mm I.D. | 07746-0030100 |
| Attachment, 30 mm | 07746-0030300 |
| Driver shaft | 07964-MB00200 |
| Driver | 07749-0010000 |
| Attachment, 32 × 35 mm | 07746-0010100 |
| Pilot, 15 mm | 07746-0040300 |

# TROUBLESHOOTING

**Excessive noise**
- Worn connecting rod big end bearing
- Bent connecting rod
- Worn crankshaft main journal bearing
- Worn transmission bearing
- Worn balancer bearing
- Incorrect balancer backlash adjustment

**Hard to shift**
- Improper clutch operation
- Incorrect transmission oil weight
- Incorrect clutch adjustment
- Bent shift fork
- Bent fork shaft
- Bent fork claw
- Damaged shift drum cam groove
- Bent shift spindle

**Transmission jumps out of gear**
- Worn gear dogs and slots
- Bent fork shaft
- Broken shift drum stopper
- Worn or bent shift forks
- Broken shift linkage return spring

**Engine vibration**
- Excessive crankshaft runout
- Incorrect balancer timing