2012 ENGINE

Active Control Engine Mount System - Pilot

COMPONENT LOCATION INDEX

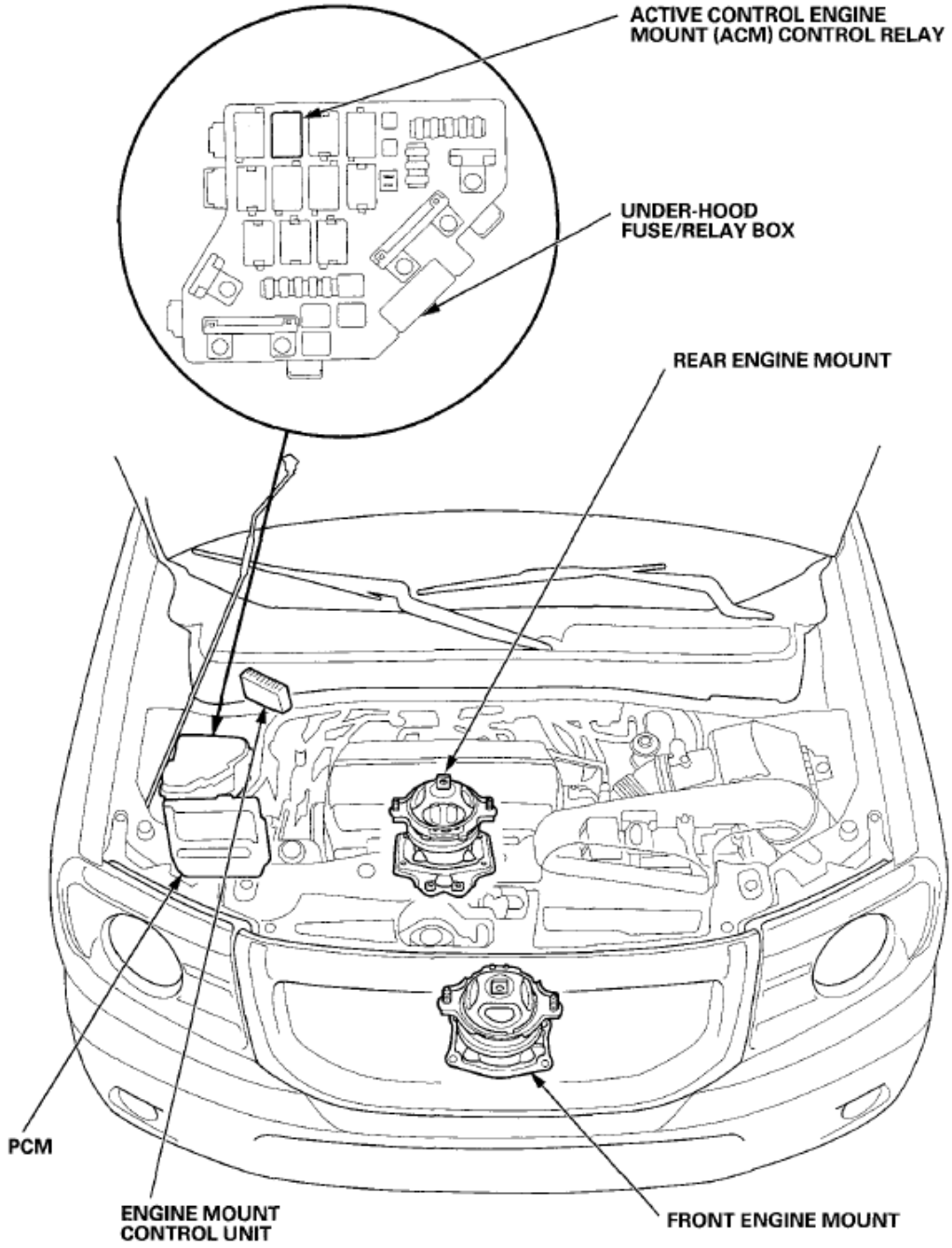

Fig. 1: Active Control Engine Mount System Component Location

Courtesy of AMERICAN HONDA MOTOR CO., INC.

GENERAL TROUBLESHOOTING INFORMATION

INTERMITTENT FAILURES

The term intermittent failure means a system may have had a failure, but it checks OK now. Check for poor connections or loose terminals at all connectors related to the circuit that you are troubleshooting.

OPENS AND SHORTS

Open and short are common electrical terms. An open is a break in a wire or at a connection. A short is an accidental connection of a wire to ground or to another wire. In simple electronics, this usually means something won't work at all. With complex electronics (such as PCMs) this can sometimes mean something works, but not the way it's supposed to.

HOW TO USE THE HDS

1. Connect the HDS to the DLC (A) located under the driver's side of the dashboard.

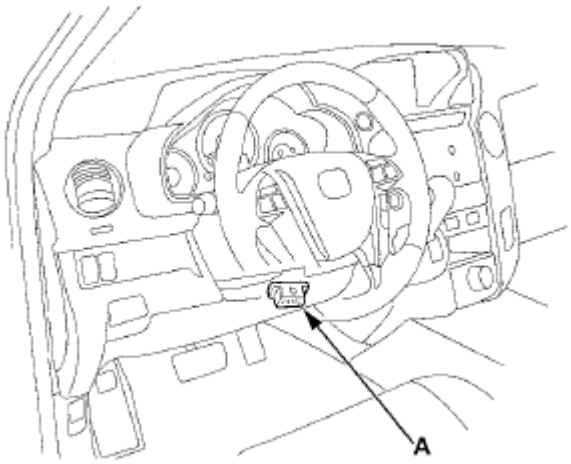

Fig. 2: Identifying DLC Under Driver's Side Of Dashboard
Courtesy of AMERICAN HONDA MOTOR CO., INC.

2. Turn the ignition switch to ON (II).
3. Make sure the HDS communicates with the vehicle and the PCM. If it does not communicate, troubleshoot the DLC circuit (see **DLC CIRCUIT TROUBLESHOOTING**).
4. Check the DTC and note it. Also check the freeze data and/or on-board snapshot data, and download any data found. Then refer to the indicated **DTC'S TROUBLESHOOTING**, and begin the appropriate troubleshooting procedure.

NOTE:

- **Freeze data indicates the engine conditions when the first**

malfunction was detected.

- **The HDS can read the DTC, freeze data, on-board snapshot, and current data, about the active control engine mount (ACM) system.**
- **For specific operations, refer to the user's manual that came with the HDS.**

HDS CLEAR COMMAND

The PCM stores DTCs about the ACM system even if there is no electrical power such as when the battery negative terminal or No. 19 FI MAIN (15 A) fuse are disconnected. Stored data based on failed parts should be cleared by using the CLEAR COMMAND of the HDS, if parts are replaced.

The HDS has two kinds of clear commands to meet this purpose. They are DTC clear, and PCM reset. The DTC clear command erases all stored DTC codes, freeze data, on-board snapshot, and readiness codes. This must be done with the HDS after reproducing the DTC during troubleshooting.

The PCM reset command erases all stored DTC codes, freeze data, on-board snapshot, readiness codes, and all specific data about the ACM system.

DTC CLEAR

1. Clear the DTC with the HDS while the engine is stopped.
2. Turn the ignition switch to LOCK (0).
3. Turn the ignition switch to ON (II), and wait 30 seconds.
4. Turn the ignition switch to LOCK (0), and disconnect the HDS from the DLC.

ACM RESET

1. Reset the ACM with the HDS while the engine is stopped.
2. Turn the ignition switch to LOCK (0).
3. Turn the ignition switch to ON (II), and wait 30 seconds.
4. Turn the ignition switch to LOCK (0), and disconnect the HDS from the DLC.

HOW TO TROUBLESHOOT CIRCUITS AT THE ENGINE MOUNT CONTROL UNIT

1. Connect one side of the patch cords terminals (A), to a commercially available digital multimeter (B), and connect the other side of the terminals (C) to a commercially available banana jack (Pomona Electronics Tool No. 3563 or equivalent) (D).

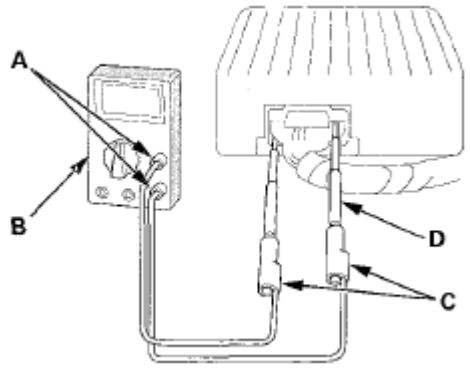

Fig. 3: Identifying Patch Cords Terminals, Digital Multimeter And Terminals
Courtesy of AMERICAN HONDA MOTOR CO., INC.

2. Using the wire insulation as a guide for the contoured tip of the backprobe adapter, gently slide the tip into the connector from the wire side until it touches the end of the wire terminal.
3. If you cannot get to the wire side of the connector or the wire side is sealed (A), disconnect the connector, and probe the terminals (B) from the terminal side. Do not force the probe into the connector.

NOTE: Do not puncture the insulation on a wire. Punctures can cause poor or intermittent electrical connections.

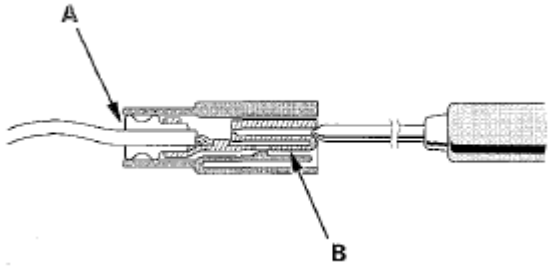

Fig. 4: Identifying Sealed And Terminals
Courtesy of AMERICAN HONDA MOTOR CO., INC.

DTC TROUBLESHOOTING INDEX

DTC TROUBLESHOOTING INDEX

DTC	Detection Item
P0A14	Front Engine Mount Actuator Circuit Malfunction
P0A15	Front Engine Mount Actuator Control Circuit Low Current
P0AB6	Rear Engine Mount Actuator Circuit Malfunction
P0AB7	Rear Engine Mount Actuator Control Circuit Low Current
P15AB	Engine Mount Control Unit Power Source Circuit

	Low Voltage
P15B0	CKP Sensor Signal Malfunction
P15BE	CMP Sensor Signal Malfunction
P15BF	CMP Sensor Signal Intermittent Interruption
P15C0	CKP Sensor Signal Intermittent Interruption
P16C4	Engine Mount Actuator Control Power Circuit Stuck OFF
P16C5	Engine Mount Actuator Control Power Circuit Stuck ON
P16C6	Engine Mount Actuator High Voltage During Function Test
U0029	F-CAN Malfunction (BUS-OFF)
U0100	F-CAN Malfunction (ACM-PCM)

SYSTEM DESCRIPTION

OVERVIEW

The active control engine mount (ACM) system reduces the amount of engine vibration which is transmitted to the passenger's compartment.

The ACM system consists of the engine mount actuators, the engine mount control unit, and the PCM.

The PCM receives the engine vibration signal from the CKP sensor and the CMP sensor, then sends the signal which is in phase with the predicted engine vibration to the engine mount control unit.

The engine mount control units ends current for driving the ACM actuator to the actuator and it operates the plunger to reduce the amount of engine vibration.

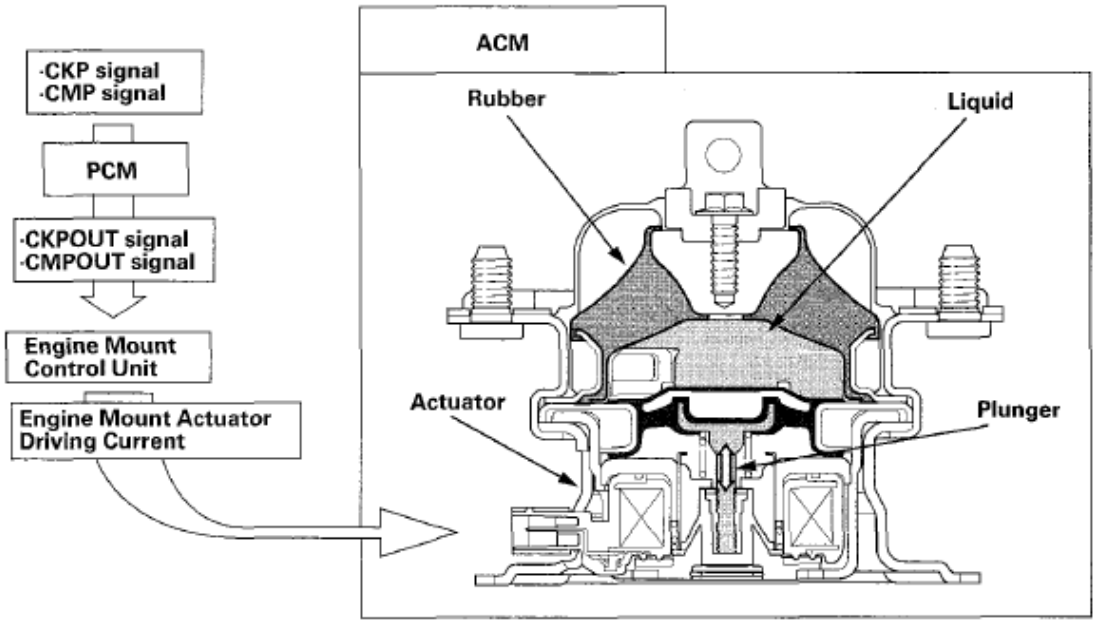

The ACM changes the engine mount firmness with the actuator and the plunger.

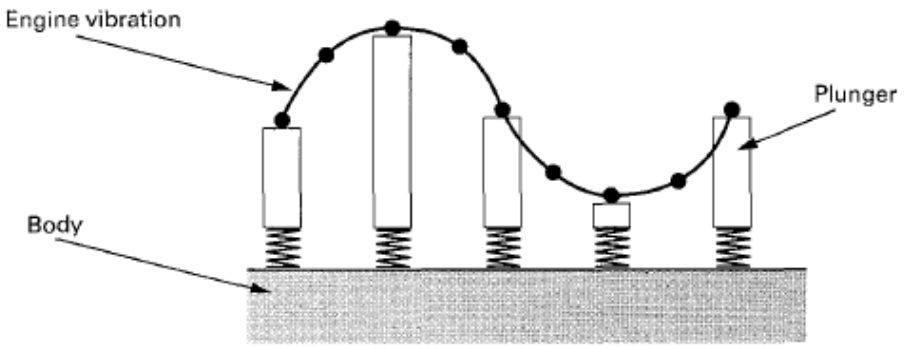

Fig. 5: Overview Of Active Control Engine Mount (ACM) System
Courtesy of AMERICAN HONDA MOTOR CO., INC.

ENGINE MOUNT CONTROL UNIT 16P CONNECTOR

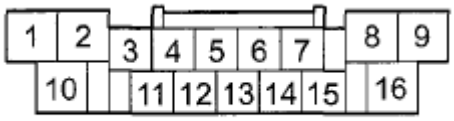

Wire side of female terminals

Fig. 6: Identifying Engine Mount Control Unit 16P Connector
Courtesy of AMERICAN HONDA MOTOR CO., INC.

Cavity	Wire Color	Terminal Name	Connects to
1	BLK	PG	Body ground to G202
2	BLU	SOLFP	Front engine mount actuator

3	BLK	LG	Body ground to G202
4	Not used	Not used	
5	YEL	IG1	No. 10 (7.5 A) fuse in the under-dash fuse/relay box
6	Not used	Not used	
7	RED	CMP	PCM (CMPOUT)
8	WHT	SOLRP	Rear engine mount actuator
9	GRN	SOLRM	Rear engine mount actuator
10	YEL	IGSOL	No. 12 (10 A) fuse in the under-hood fuse/relay box
11	BRN	SOLRLY	Active control engine mount (ACM) control relay
12	RED	CANL	PCM (CANL)
13	Not used	Not used	
14	WHT	CANH	PCM (CANH)
15	GRN	CKP	PCM (CKPOUT)
16	PNK	SOLFM	Front engine mount actuator

CIRCUIT DIAGRAM

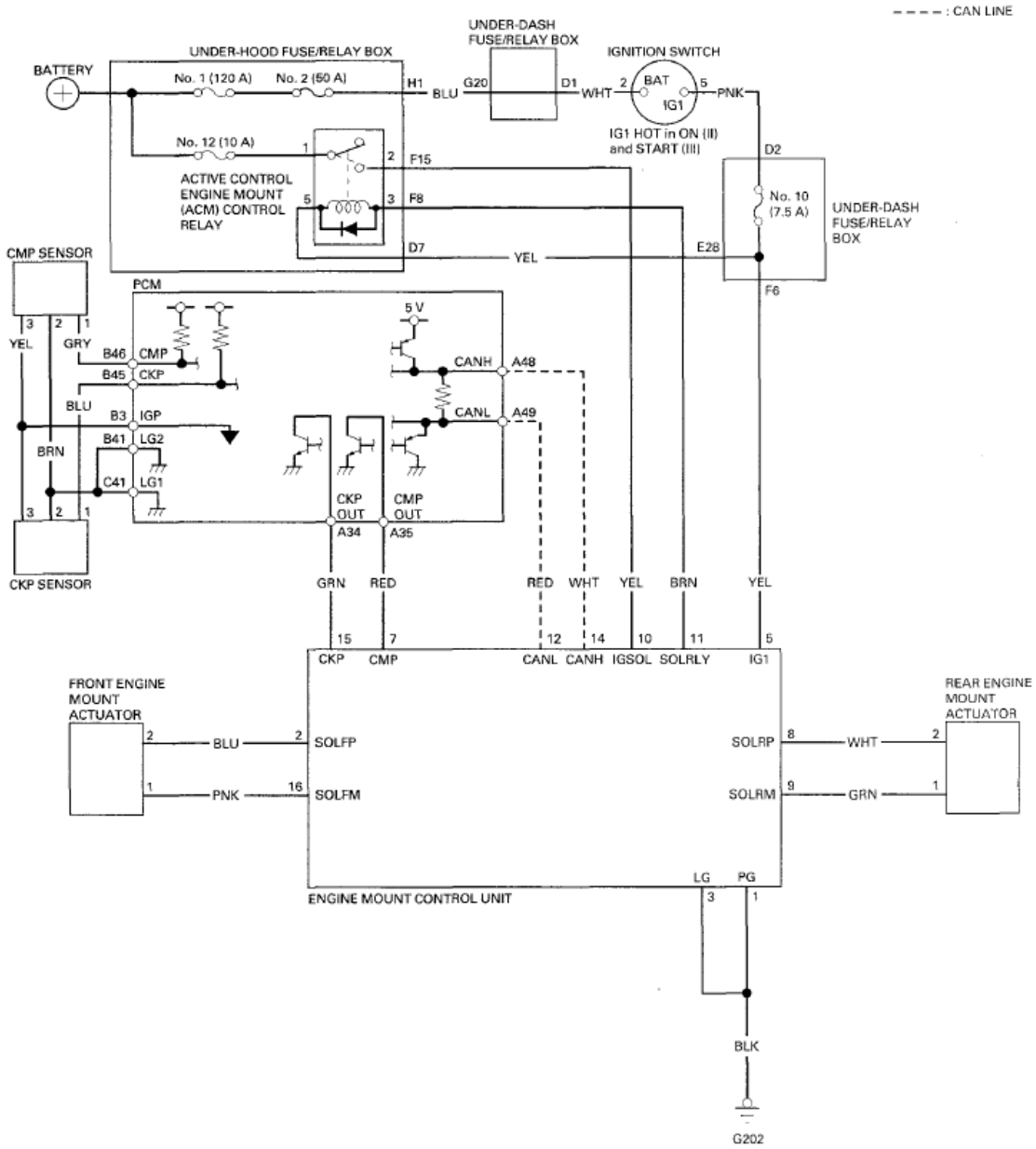

Fig. 7: Front Engine Mount Actuator Circuit Diagram
Courtesy of AMERICAN HONDA MOTOR CO., INC.

DTC TROUBLESHOOTING

DTC P0A14: FRONT ENGINE MOUNT ACTUATOR CIRCUIT MALFUNCTION; DTC P0AB6: REAR ENGINE MOUNT ACTUATOR CIRCUIT MALFUNCTION

NOTE:

- **Before you troubleshoot, record all freeze data and any on-board snapshots, and review the general troubleshooting information (see GENERAL TROUBLESHOOTING INFORMATION).**

- **Information marked with an asterisk (*) applies to the rear engine mount actuator.**
- **When testing the engine mount actuator, be sure to use a Digital volt/ohm meter (DVOM) capable of reading 0.01 ohms change of resistance.**
- **Be sure to zero the meter before checking the engine mount actuator.**
- **If the vehicle has been driven, allow the engine mount actuator to cool down for about 2 hours before testing.**

1. Turn the ignition switch to ON (II).
2. Clear the DTC with the HDS (see **HDS CLEAR COMMAND**).
3. Start the engine, and let it idle 20 seconds.
4. Check for Pending or Confirmed DTCs with the HDS.

   Is DTC P0A14 and/or P0AB6' indicated?

   YES -Go to step 5.

   NO -Intermittent failure, the system is OK at this time. Check for poor connections or loose terminals at the engine mount control unit and the engine mount actuator.

5. Turn the ignition switch to LOCK (0).
6. Disconnect the front engine mount actuator (rear engine mount actuator)* 2P connector.
7. Disconnect the engine mount control unit 16P connector.
8. Turn the ignition switch to ON (II).
9. Measure the voltage between body ground and the appropriate engine mount control unit 16P connector terminal (see table).

DTC	ENGINE MOUNT ACTUATOR TERMINAL	ENGINE MOUNT CONTROL UNIT TERMINAL	WIRE COLOR
P0AB6	Rear side No. 1	No. 9	GRN
	Rear side No. 2	No. 8	WHT
P0A14	Front side No. 1	No. 16	PNK
	Front side No. 2	No. 2	BLU