# 1. CONSTRUCTION

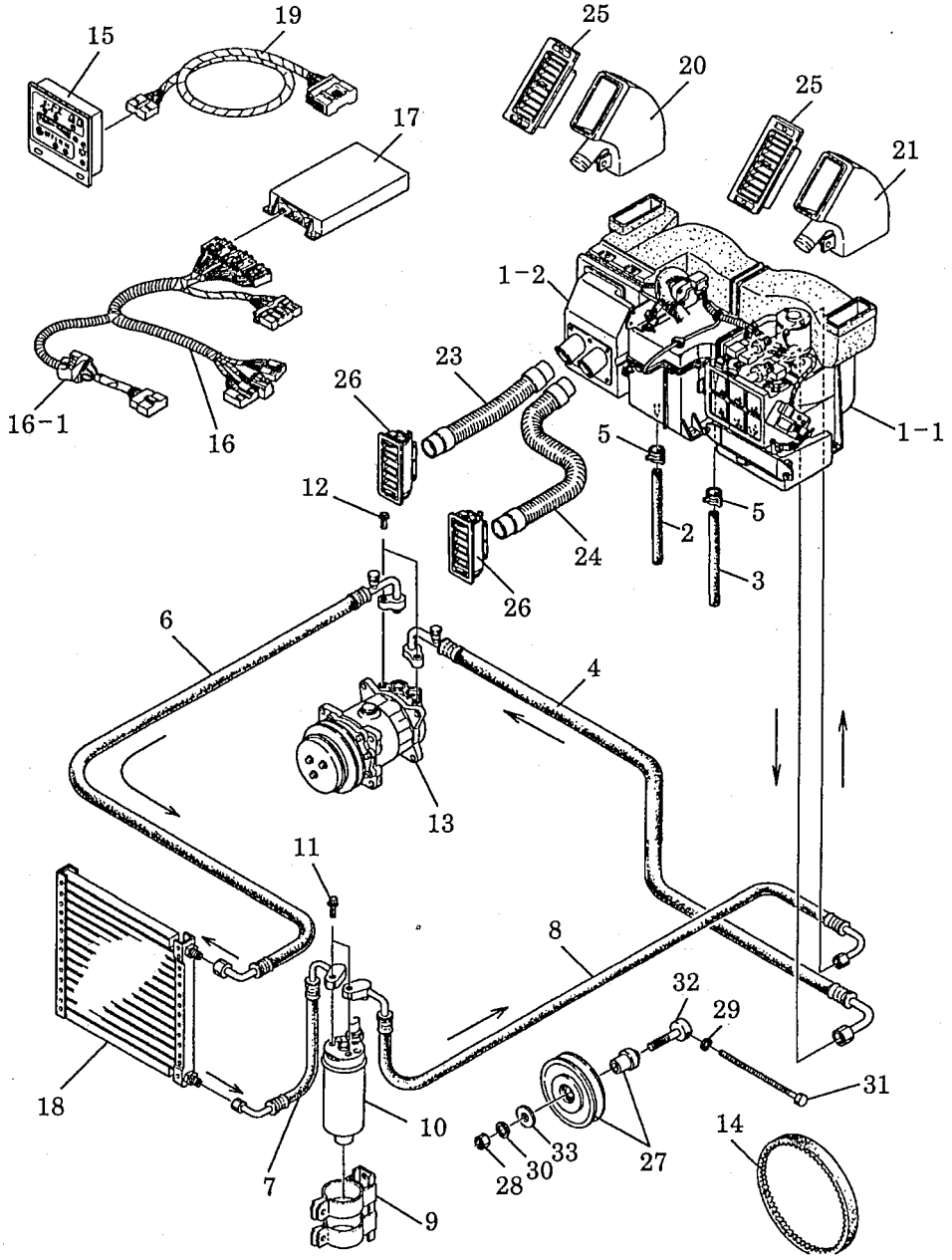


Fig. 1

| No. | NAME | Q'ty | No. | NAME | Q'ty | No. | NAME | Q'ty |
|---|---|---|---|---|---|---|---|---|
| 1-1 | INTAKE UNIT | 1 | 11 | SEMS BOLT M6 | 2 | 23 | DUCT HOSE B | 1 |
| 1-2 | AIR-CONDITIONER UNIT | 1 | 12 | SEMS BOLT M8 | 2 | 24 | DUCT HOSE C | 1 |
| 2 | DRAIN HOSE | 1 | 13 | COMPRESSOR | 1 | 25 | GRILL | 2 |
| 3 | DRAIN HOSE | 1 | 14 | V-BELT | 1 | 26 | GRILL | 2 |
| 4 | S HOSE | 1 | 15 | PANEL | 1 | 27 | PULLEY | 1 |
| 5 | HOSE CLAMP | 2 | 16 | HARNESS A | 1 | 28 | NUT M10 | 1 |
| 6 | D HOSE | 1 | 16-1 | FUSE 1A | 3 | 29 | SPRING WASHER | 1 |
| 7 | L HOSE | 1 | 17 | CONTROL AMP. | 1 | 30 | SPRING WASHER | 1 |
| 8 | L HOSE | 1 | 18 | CONDENSER | 1 | 31 | BOLT | 1 |
| 9 | RECEIVER DRYER | 1 | 19 | HARNESS B | 1 | 32 | SLIDE SHAFT | 1 |
| | BRACKET | | 20 | DUCT A | 1 | 33 | PULLEY STOPPER | 1 |
| 10 | RECEIVER DRYER | 1 | 21 | DUCT B | 1 | | | |

# 2. CONSTRUCTION OF MAIN COMPONENTS

## 2.1 INTAKE UNIT

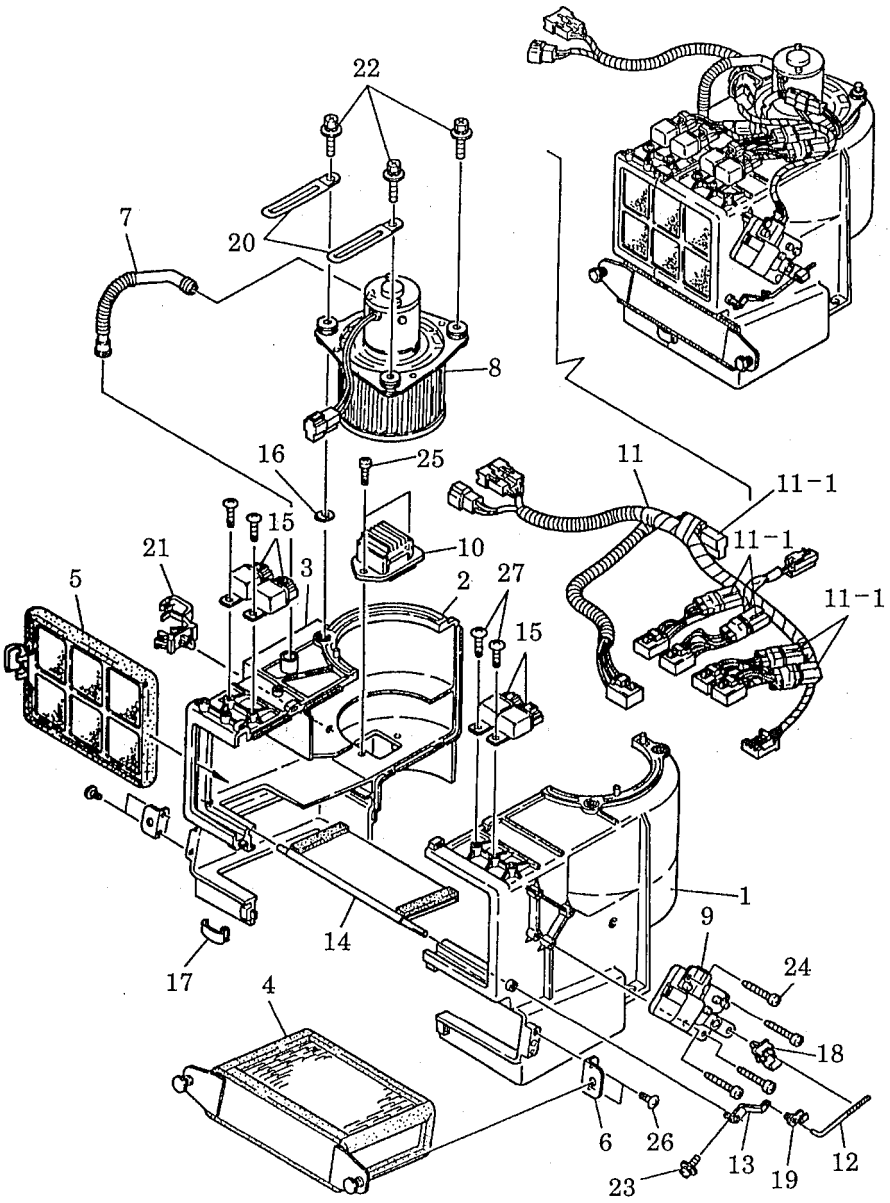


Fig. 2

| No. | NAME | Q'ty | No. | NAME | Q'ty | No. | NAME | Q'ty |
|---|---|---|---|---|---|---|---|---|
| 1 | FAN CASING LH | 1 | 11 | HARNESS | 1 | 20 | CLAMP | 2 |
| 2 | FAN CASING RH | 1 | 11-1 | DIODE 1B | 5 | 21 | HARNESS CLAMP | 1 |
| 3 | CONNECTING OPENING | 1 | 12 | LINK ROD | 1 | 22 | SEMS BOLT | 3 |
| 4 | OUTER AIR FILTER | 1 | 13 | DAMPER LEVER | 1 | 23 | SEMS BOLT | 1 |
| 5 | INNER AIR FILTER | 1 | 14 | INTAKE DAMPER | 1 | 24 | MACHINE SCREW | 4 |
| 6 | HOLDER | 2 | 15 | RELAY | 4 | 25 | MACHINE SCREW | 2 |
| 7 | COOLING HOSE | 1 | 16 | WASHER | 3 | 26 | MACHINE SCREW | 4 |
| 8 | BLOWER MOTOR | 1 | 17 | CLAMP | 9 | 27 | MACHINE SCREW | 4 |
| 9 | ACTUATOR | 1 | 18 | ROD CLAMP | 1 | | | |
| 10 | RESISTER | 1 | 19 | ROD HOLDER | 1 | | | |

## 2.2 AIR-CONDITIONER UNIT

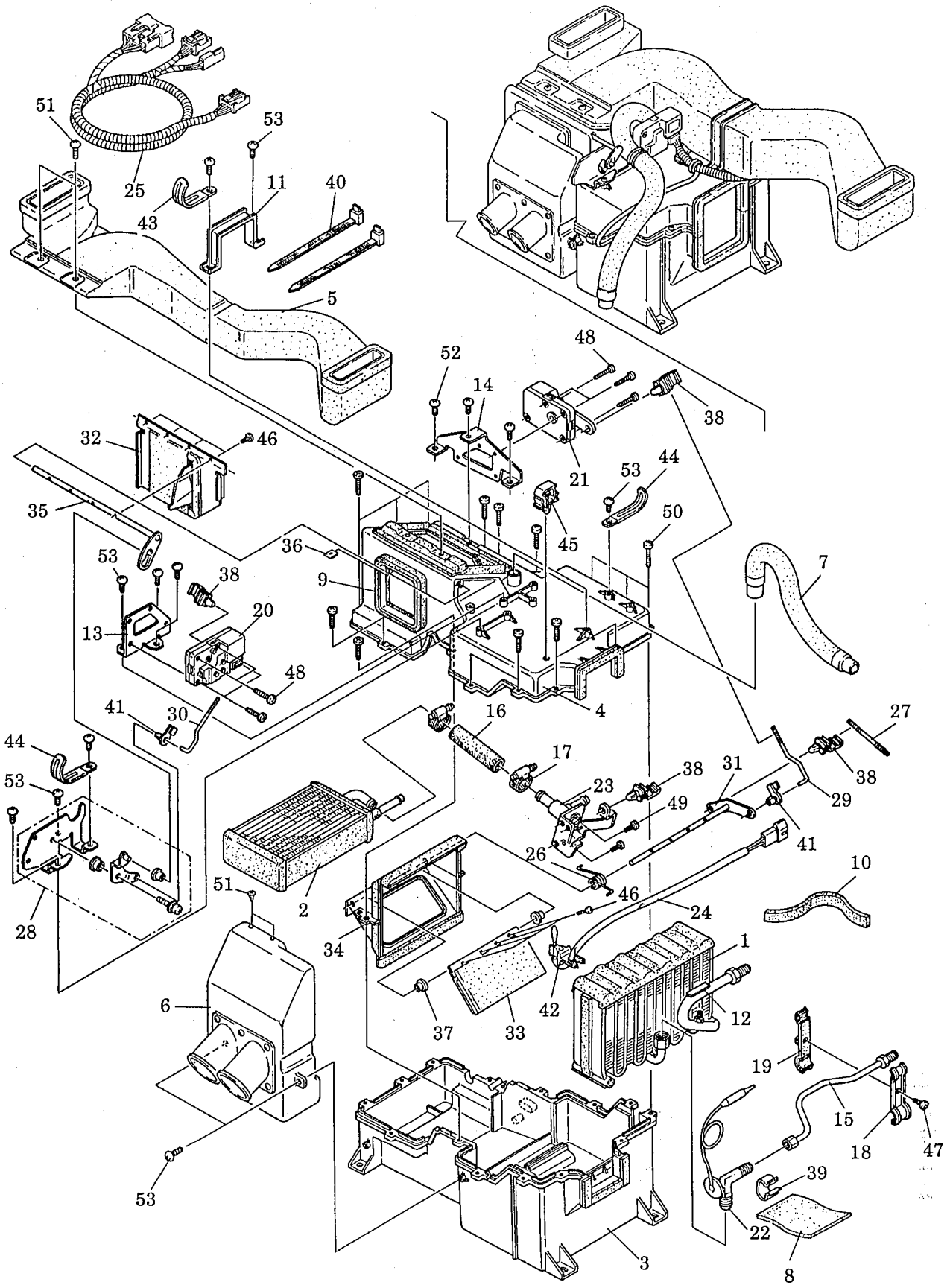


Fig. 3

| No. | NAME | Q'ty | No. | NAME | Q'ty | No. | NAME | Q'ty |
|---|---|---|---|---|---|---|---|---|
| 1 | EVAPORATOR | 1 | 19 | PIPE RETAINER | 1 | 37 | SPACER | 2 |
| 2 | HEATER CORE | 1 | 20 | ACTUATOR | 1 | 38 | ROD CLAMP | 4 |
| 3 | UNIT CASING LOWER | 1 | 21 | ACTUATOR | 1 | 39 | THERMO TUBE STAY | 1 |
| 4 | UNIT CASING UPPER | 1 | 22 | VALVE | 1 | 40 | BAND | 2 |
| 5 | UPPER DUCT | 1 | 23 | VALVE | 1 | 41 | ROD HOLDER | 2 |
| 6 | LOWER DUCT | 1 | 24 | THERMISTOR | 1 | 42 | SENSOR HOLDER | 1 |
| 7 | DUCT HOSE | 1 | 25 | HARNESS | 1 | 43 | CLAMP | 1 |
| 8 | THERMAL INSULATION | 1 | 26 | SPRING | 1 | 44 | CORD RETAINER | 2 |
| 9 | GASKET | 1 | 27 | VALVE ROD | 1 | 45 | HARNESS CLAMP | 1 |
| 10 | GASKET | 1 | 28 | MODE LINK | 1 | 46 | BIND SCREW M3 | 8 |
| 11 | DUCT RETAINER | 1 | 29 | LINK ROD | 1 | 47 | BIND SCREW M4 | 1 |
| 12 | THERMO TUBE HOLDER | 1 | 30 | LINK ROD | 1 | 48 | BIND SCREW M4 | 8 |
| 13 | ACTUATOR BRACKET | 1 | 31 | DAMPER SHAFT | 1 | 49 | MACHINE SCREW | 3 |
| 14 | ACTUATOR BRACKET | 1 | 32 | MODE DAMPER | 1 | 50 | MACHINE SCREW | 15 |
| 15 | INLET PIPE | 1 | 33 | AIR MIX DAMPER | 1 | 51 | MACHINE SCREW | 4 |
| 16 | HEATER HOSE | 1 | 34 | DAMPER BASE | 1 | 52 | MACHINE SCREW | 3 |
| 17 | HOSE BAND | 2 | 35 | DAMPER SHAFT | 1 | 53 | MACHINE SCREW | 11 |
| 18 | PIPE RETAINER | 1 | 36 | NUT | 2 | | | |

Fig. 3 (2/2)

## 2.3 RECEIVER DRYER

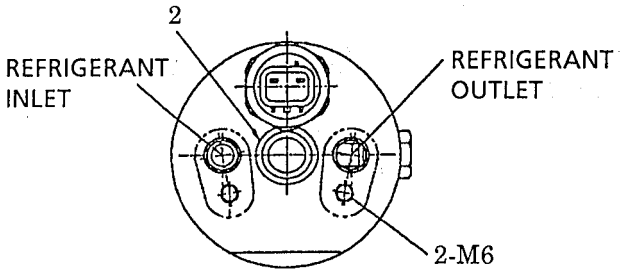


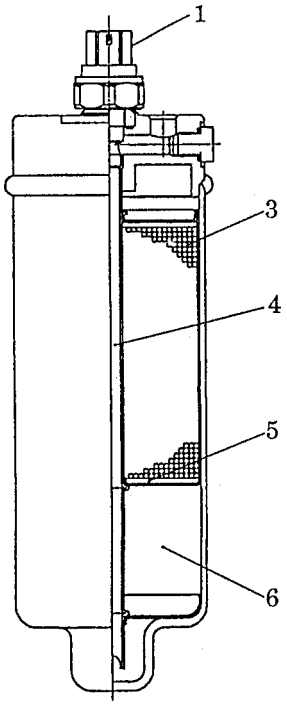


Fig. 4

| No. | NAME | Q'ty |
|---|---|---|
| 1 | PRESSURE SWITCH | 1 |
| 2 | SIGHT GLASS | 1 |
| 3 | DESICCANT | 1 |
| 4 | SUCTION PIPE | 1 |
| 5 | FILTER | 1 |
| 6 | RECEIVER TANK | 1 |

# 3. FUNCTION

## 3.1 MECHANISM OF COOLING CIRCUIT

(1) Mechanism of Cooling

In the cooling process, the refrigerant that flows through the cooling circuit changes its phases from liquid to gas and vice versa during which process heat is transferred from the low temperature part (compartment) to the high temperature part (outside of the vehicle).

1) Kind of Refrigerant

Many kinds of refrigerants that change in that way are available, but the following requirements are needed for use in such applications:

- Latent heat of vaporization (heat of vaporization) is large.
- It is easy to liquefy (condense). (It dose not require very high pressure for condensation.)
- It is easy to gasify (evaporate). (It evaporates sufficiently at not too low pressure, i.e. cools down an object.)
- It has small specific heat. (Since the refrigerant itself is cooled by the expansion valve, the loss resulting from it must be held down to a minimum.)
- It has a high critical temperature and a low solidification point.
- It is stable chemically and does not corrode and permeate into the circuit parts.
- It is free from toxicity, objectionable odor, flammability and explosiveness and excels in thermal conductivity and electric insulation.
- It has small specific volume.
- It is easy to find out leakage.

Out of refrigerants meeting the above-mentioned requirements, ones having characteristics that suit the intended cooling unit are chosen and used. If a refrigerant other that those designated is used, sufficient refrigeration will not be performed or the equipment in which the refrigerant is used may be broken. Therefore, always use a designated refrigerant for the cooling unit.

Table 1 shows the principal characteristics of the R134a refrigerant that is used in this machine.

Table 1

| Item | R143a |
|---|---|
| Chemical formula | $CH_2FCF_3$ |
| Molecular weight | 102.03 |
| Boiling point | -26.19°C (-15.14°F) |
| Critical temperature | 101.14°C (214.05°F) |
| Critical pressure | 4.065MPa (41.45kgf/cm$^2$ *1) |
| Critical density | 511kg/m$^3$ (31.9 lb/ft$^3$) |
| Density of saturated liquid [25°C (77.0°F)] | 1206kg/m$^3$ (75.3 lb/ft$^3$) |
| Specific volume of saturated vapor [25°C (77°F)] | 0.0310m$^3$/kg (0.496ft$^3$/lb) |
| Latent heat of vaporization [0°C (32°F )] | 197.5KJ/kg {47.19kcal/kg} |
| Flammability | Nonflammable |
| Ozone destruction coefficient | 0 |

*1 : 1MPa (mega pascal) equals 10.1972kgf/cm$^2$ (145psi)

(2) Characteristics of Refrigerant (See Fig.5.)
In general, the fluid (general term of gas and liquid) has the following qualities:

1) As a gas under certain pressure is cooled down, it begins to condensate at a certain temperature to take a liquid state. The temperature at which condensation begins is unique to each substance (fluid) at a given pressure. The temperature determined by a given pressure is called saturation temperature.

2) Inversely to 1) above, the pressure at which a gas condenses for a temperature is determined. This pressure is called saturation pressure.
Fig.5 illustrates the relationships between the saturation temperature and the saturation pressure in the case of refrigerant R134a used in the air-conditioner. At the temperature and the pressure on the lower righthand side of the curve in Fig.5, the refrigerant take a gaseous state, while at the temperature and the pressure on the upper lefthand side of the curve, the refrigerant takes a liquid state.
Let us think of a case where an air-conditioner is operated in the midst of summer. As the refrigerant evaporates, it absorbs evaporation heat from the air of the compartment. In order to cool the inside of the compartment down to 25°C (77°F), the refrigerant must transform (evaporate) from a liquid to a gaseous state at a lower temperature. It can be seen from Fig.5 that R134a under a pressure above the atmospheric pressure is capable of cooling the inside of the compartment sufficiently. (If a refrigerant that requires a pressure below the atmospheric pressure to cool it to a required temperature is used, air is mixed into the circuits, thereby deteriorating the performance of the cooling unit.) In the process in which gaseous refrigerant is brought back to a liquid state, the refrtgerant is cooled and condensed by the outer air exceeding 35°C (95°F).
Accordingly the refrigerant is capable of condensing at a pressure exceeding 10.2kgf/cm$^2$G (145psi·G), as seen from Fig.5.

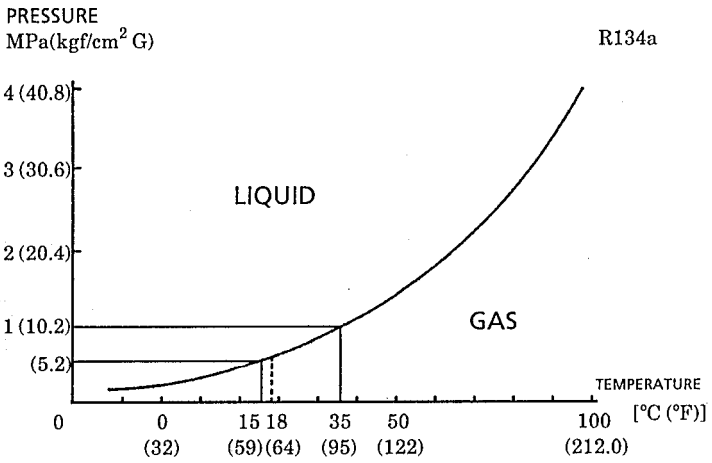

Fig. 5 Pressure-temperature characteristics of R134a

Note ; 1PMa=145psi

## 3.2 COOLING CIRCUIT

Fig.6 illustrates the cooling circuit of the car air-conditioner.

In this circuit diagram, the portion that cools the air of the compartment is the evaporator. The object air is cooled off by utilizing the fact that the refrigerant takes heat off the surrounding area as evaporation heat as it evaporates in the cooling circuit. Since the part at which vaporization of the refrigerant takes place is the evaporator, cooled air is constantly delivered to the circumference of the evaporator by the blower fan. In the meantime, liquid refrigerant (slightly wet vaporized refrigerant) is fed into the evaporator, when "cooling" effect is attained. For instance, in order to cool the air to 15°C (59°F), the refrigerant can not absorb evaporation heat from the air unless it evaporates at a temperature lower that 15°C (59°F). For that purpose, it can be seen from Fig.5 that the pressure of the refrigerant in the evaporator must be less than 5.2kgf/cm$^2$G (74psi·G).

Furthermore, the cooling effect deteriorates unless the feed rate of the refrigerant is controlled so that all of the refrigerant supplied to the evaporator vaporizes and turns into dry vapor.

Consequently, the cooling circuit is so constructed that the evaporator can cool down an object (air in this case) sufficiently (i.e. so as to decrease the pressure in the evaporator) and that an adequate amount of refrigerant can be fed to the evaporator.

The feed rate of the refrigerant is controlled by the expansion valve, but the pressure in the evaporator is held low by the throttling action of the expansion valve and the suction action of the compressor. The compressor acts as a pump that allows the refrigerant to circulate. The compressive action of the compressor and the heat exchange (heat radiation) action of the condenser transform the refrigerant in a dry vapor state back to a liquid state.

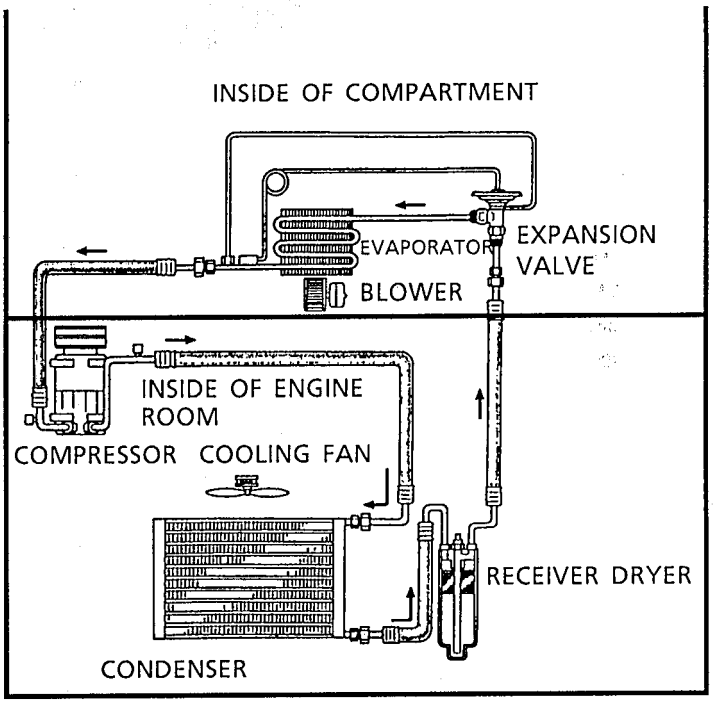


Fig. 6 Construction of cooling circuit

## 3.3 COMPONENT PARTS

(1) Evaporator (See Fig.7.)

The evaporator is an important heat exchanger that absorbs the heat of the compartment air (object) by the utilization of the latent vaporization heat of the low-temperature, low-pressure liquid-state refrigerant. Therefore, it is necessary that satisfactory heat transfer between the object and the refrigerant take place in the evaporator.

To that end, the evaporator is equipped with fins on the air side in order to increase the heat transfer area of the air side and thereby perform excellent thermal transfer between the refrigerant and the air.

The humidity in the air condenses as the air cools down and adheres to the outside of the evaporator as water drops. The cooling effect deteriorates if the water drops freeze. Therefore, how to discharge water is an important point.

The amount of refrigerant supplied to the evaporator is controlled by the expansion valve which is described in the following. In order to attain proper control, it is necessary to reduce the pressure drop of the refrigerant of the evaporator. Accordingly, reducing the pressure drop is one element that makes the evaporator attain its full performances.

(2) Expansion Valve

In order for the evaporator to fulfill its performances, a proper amount of low-pressure low-temperature liquid refrigerant must be fed to the evaporator.

If the feed rate is too low, the refrigerant completes vaporization early in the evaporator which results in deterioration of the cooling effect. If the feed rate is too high, unvaporized liquid refrigerant returns to the compressor (liquid back). This not only deteriorates the cooling effect, but also damages the compressor valves.

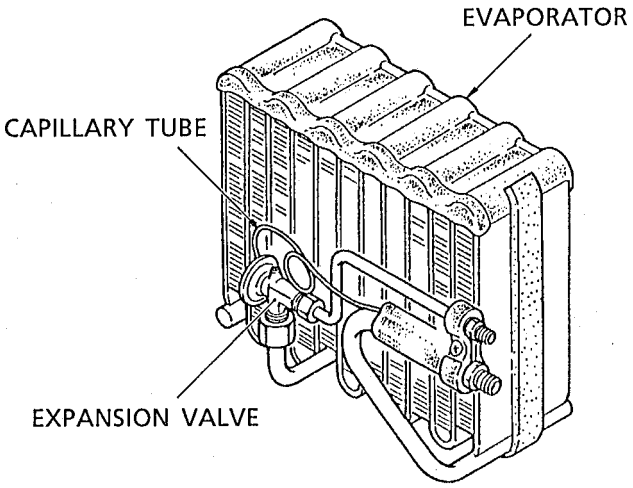


Fig. 7 Evaporator