Removal and installation of fuel injector assembly

Special tools

Symbol		Part number	Part name
A	3	795-799-6700	Primer
	4	795-799-1131	Gear
	5	795-799-8150	Remover

Removal

WARNING

Disconnect the negative terminal (–) of the battery before starting with the work.

1. Remove cover (1).

2. Disconnect fuel filter hoses (2) and (3) from fuel supply pump (FSP).
   - ✘ Pull out the hose while pushing lock (L) from both sides.
3. Disconnect fuel return hose (4).

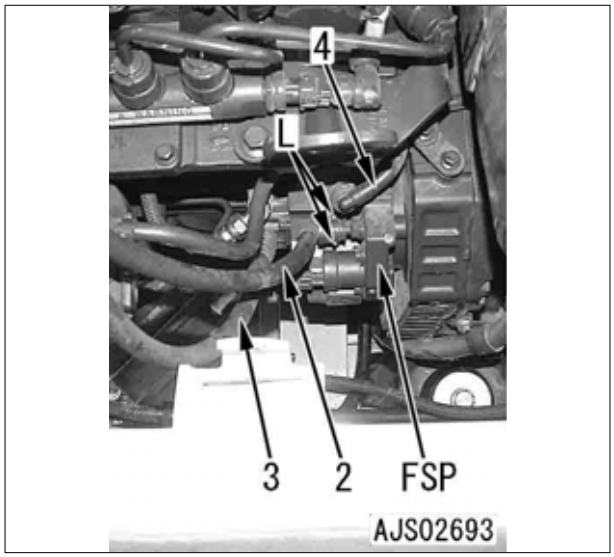

4. Disconnect dipstick bracket (6). [*1]
5. Remove hose, tube and air intake connector assembly (7). [*2]
   - ✘ Remove it without separating from the bracket.
   - ✘ Mark the hose edge and tube to show the original hose installation positions. (See figure below.)
   - ✘ When removing the cylinder head cover only, it is not necessary to remove hose, tube and air intake connector assembly (7).
6. Remove fan guard (8).
   - ✘ Remove it for checking the 3rd and 4th cylinder tops.

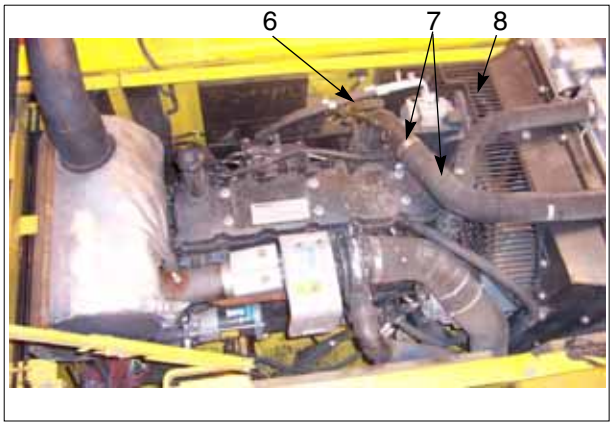

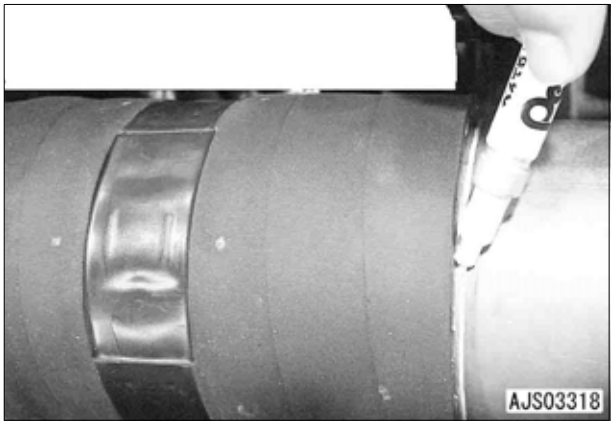

   - ✘ (9) – (13): Unused numbers
7. Disconnect fuel return hose (14). [*3]
8. Disconnect fuel return hose (15).
9. Disconnect bracket (16). [*4]
10. Remove fuel block (17). [*5]

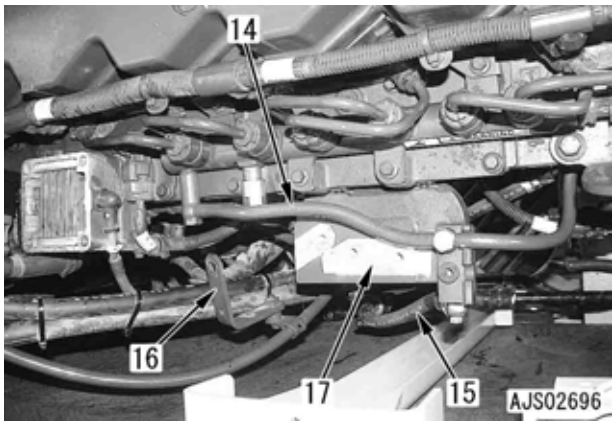

11. Disconnect connector (18).
    - Pull out connector (18) in the direction of the arrow while pushing up its lock with flat-head screwdriver [1].
12. Disconnect connectors (19).
    - As you cannot hold the connector, remove it as follows, using two flat-head screwdrivers.

12.1. Keep pushing the lock of connector (19) with flat-had screwdriver [1].

12.2. Insert flat-head screwdriver [2] to the gap between the left or right side of the lock and the connector. Then twist the screwdriver from side to side gently to remove the connector gradually.

- Keep electrical intake air heater (H) drawn to the counterweight side.
- Keep the harness drawn to the counterweight side. [*6]

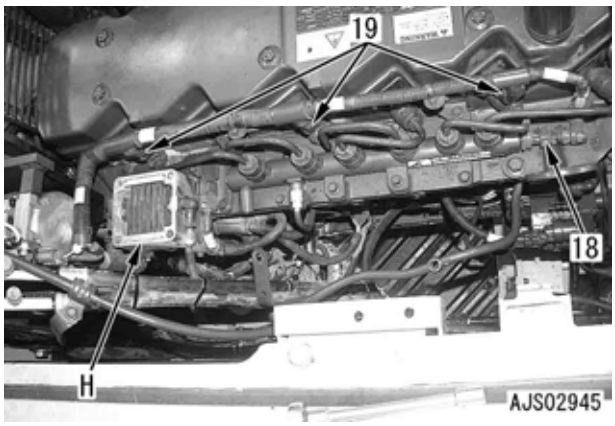

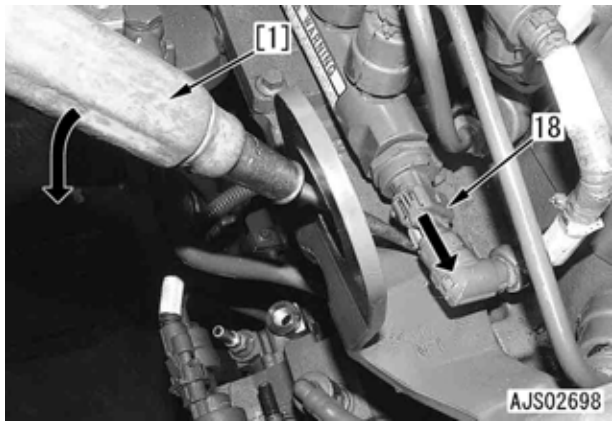

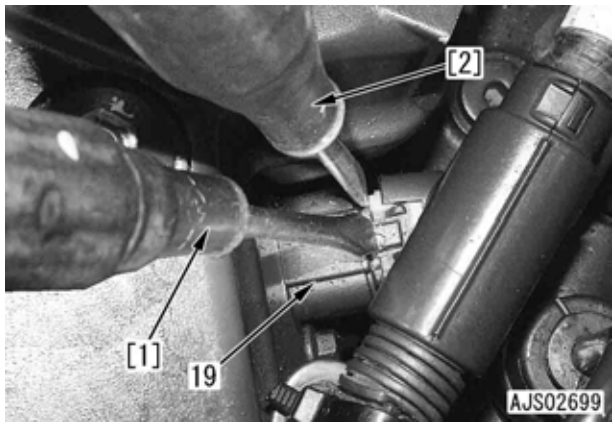

13. Remove bellows (20). [*7]
14. Remove clamp (21) from the cylinder block and disconnect fuel supply tube (22). [*8]
    - FSP: Fuel supply pump
15. Remove six bellows (23). [*9]
    - Cylinder head side only
16. Disconnect six high-pressure pipes (24) at the cylinder head side. [*10]
17. Remove common rail and high-pressure pipe assembly (25). [*11]

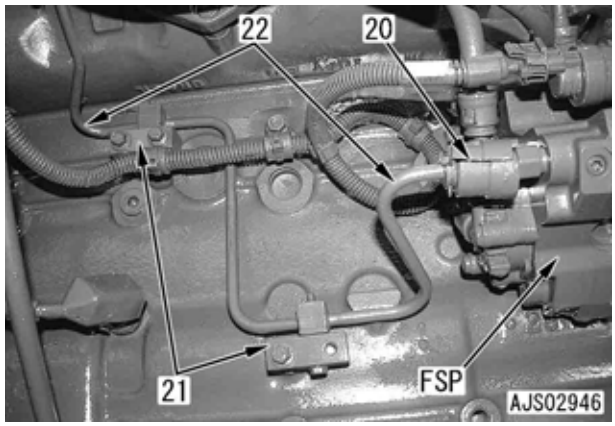

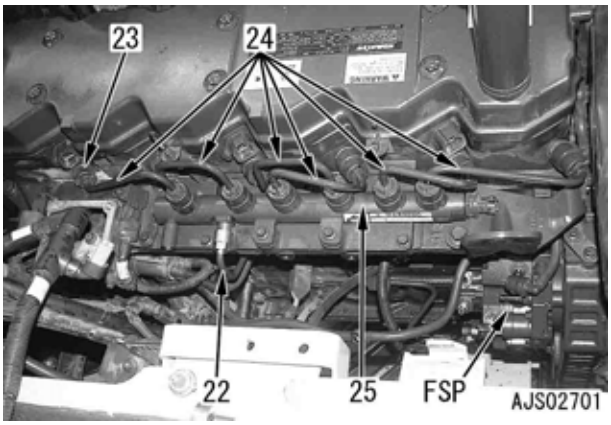

18. Remove muffler heat insulation cover (40).
    - Secure space to remove blow-by duct (26).

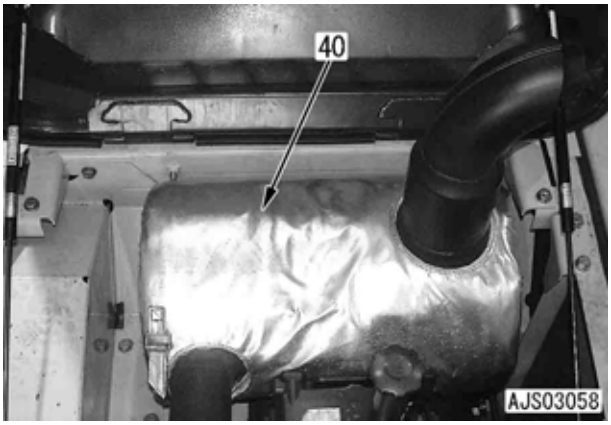

19. Remove blow-by duct (26). [*12]
20. Remove head cover (27). [*13]

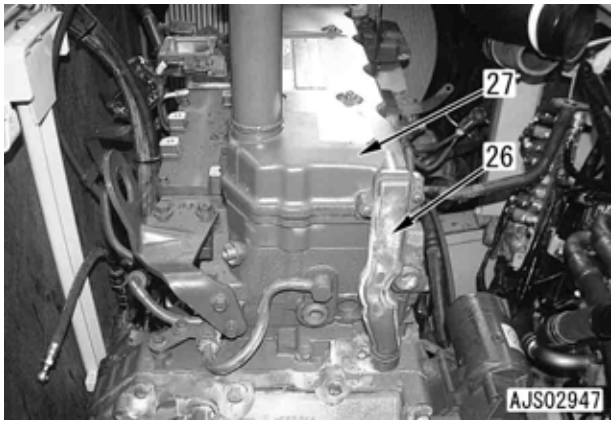

21. By cranking, align mark 1 (M1) at the damper side with mark 2 (M2) at the engine speed sensor side.
    - Be careful that the aligning position is not the 1st and 6th cylinder top position but the 3rd and 4th cylinder top position.
    - Mark 1 (M1) corresponds to wide-width slit (WS).
    - Refer to the Adjusting of Valve Clearance section in the Testing and adjusting chapter of this manual.
    - Use tool **A4** (refer to the tool list) for cranking.

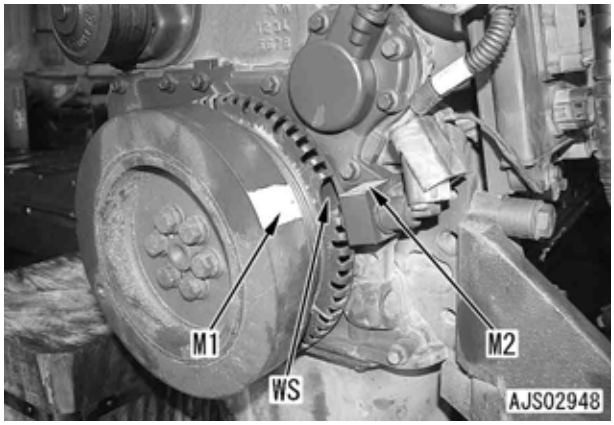

22. Remove nuts (28) for the harnesses from the injector. [*14]

Harness color	Cylinder No.
White	1, 3, 5
Black	2, 4, 6

23. Remove 12 mounting bolts and remove six rocker arm and crosshead assemblies (31).
    - Loosen locknut (29) and then loosen adjustment screw (30) a few turns so that excessive force is not put on the push rod when the rocker arm is installed.

- Keep records of installation position and direction of the crosshead (hole shape of **a** and **b** parts) (Install it in the same direction when reinstalling.)

24. Remove retainers (32) and then remove six inlet connectors (33).
    - Remove and flush dirt etc., off the surrounding area in advance to prevent them from entering the connector holes.
    - Tool **A5**: remover is adopted for removing inlet connectors (33). (Refer to the tool list.)

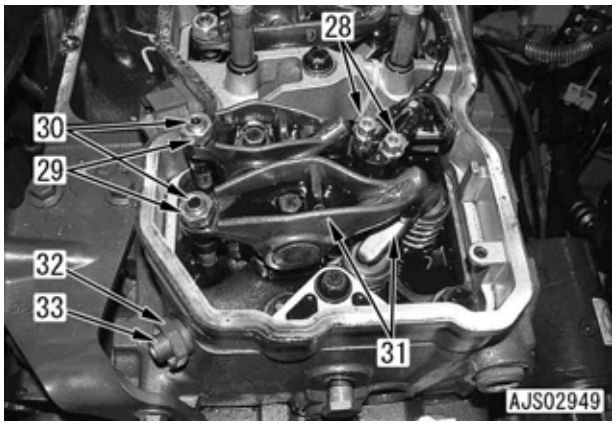

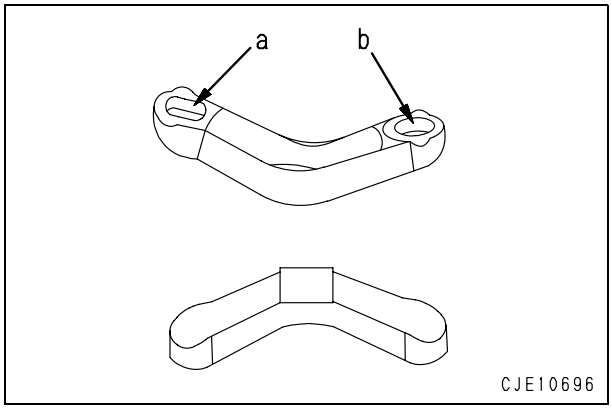

25. Remove two mounting bolts (34) for fuel injector assembly (35).
26. Remove fuel injector assembly (35) using tool **A3**.
    - Be careful not to let any dust or foreign materials enter the fuel injector assembly mounting portion.

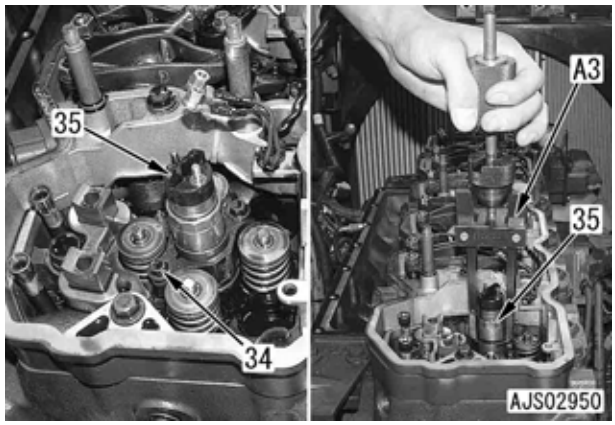

Installation

1. Fuel injector assembly

✕ Check that there is no damage or dust on the fuel injector sleeve.

1.1. Install O-ring (42) and gasket (43) to fuel injector (41).

1.2. Coat O-ring (42) and the head side of fuel injector (41) with engine oil (EO15W-40).

O-ring (42) and the head side of fuel injector (41):
engine oil (EO15W-40)

1.3. Install holder (44) to fuel injector (41) with concavity and convexity (A) fitted together.

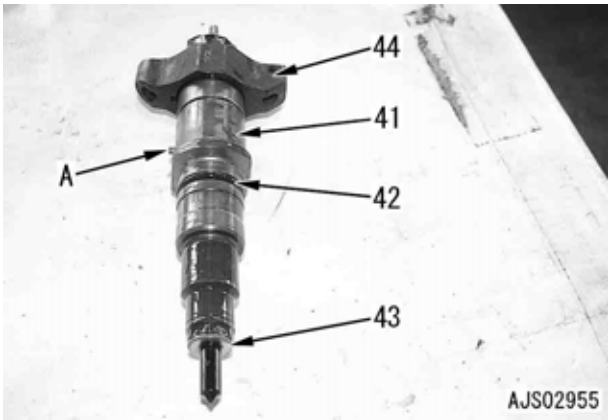

1.4. Assemble fuel injector assembly (35) to the cylinder head with its fuel inlet hole facing the intake manifold side.

1.5. Tighten bolts (34) three or four turns.

1.6. Coat the head side (B part) of inlet connector (33) with engine oil (EO15W-40).

1.7. Coat O-ring (C) of inlet connector (33) with engine oil (EO15W-40). Then insert inlet connector (33) completely, aligning (D part) with the side groove of the head.

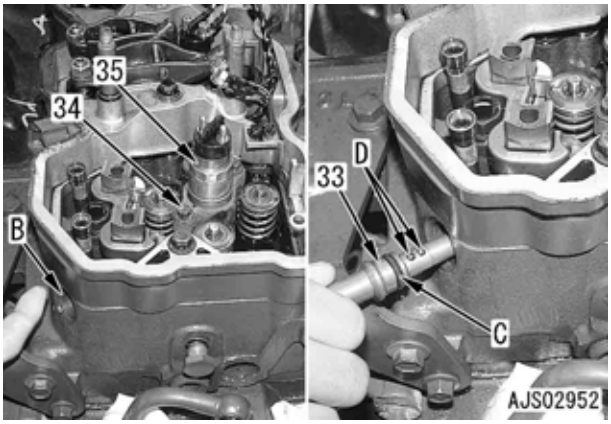

1.8. Tighten inlet connector (33) with retainer (32) by hand. (Push it into the injector hole.)

1.9. Tighten mounting bolts (34) for fuel injector assembly (35) alternately.

Bolt: **8 ± 0.8 Nm {0.81 ± 0.08 kgm}**

1.10. Tighten retainer (32).

Retainer:
50 ± 5 Nm {5.1 ± 0.5 kgm}

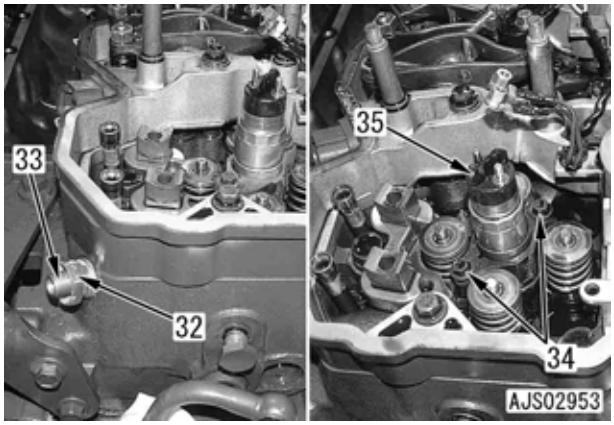

2. Rocker arm and crosshead assembly

2.1. Install rocker arm and crosshead assembly (31).

- When reusing the crosshead, install the same intake and exhaust valves in the same direction because the shapes of its holes **a** and **b** are different,
- Tighten the mounting bolt after checking that the ball portion of adjustment screw (30) is well seated in the push rod socket.

N·m Mounting bolt:
36 ± 5 Nm {3.7 ± 0.5 kgm}

2.2. Adjust the valve clearances.

- Refer to the Adjusting of Valve Clearance section in the Testing and adjusting chapter of this manual.

N·m Locknut (29):
24 ± 4 Nm {2.4 ± 0.4 kgm}

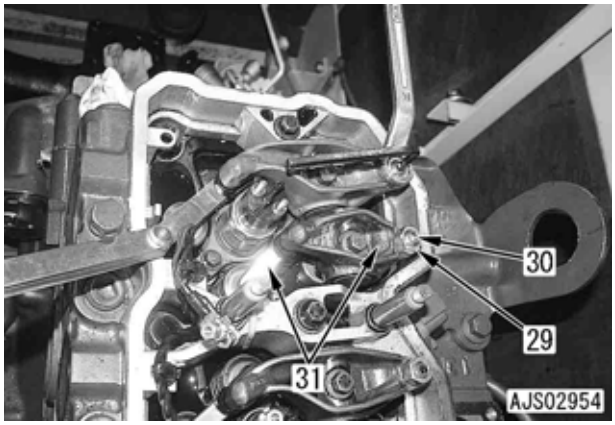

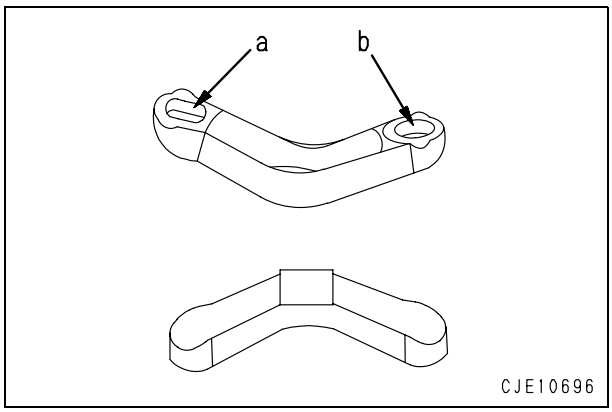

- Carry out the rest of installation in the reverse order to removal.

[*1]

N·m Bracket mounting bolt:
43 ± 6 Nm {4.4 ± 0.6 kgm}

[*2]

N·m Air intake connector mounting bolt:
24 ± 4 Nm {2.4 ± 0.4 kgm}

- MIKALOR clamp
- Use a new clamp.
- Align the hose to the original position (marking position).
- Reference
- Depth of insertion: 60mm (aftercooler side)
- Set bridge (BR) under the clamp tightening bolt as the lap with band (BR) is Min.5mm.
- Align the clamp to the original position.
- Impact wrench is not applicable to use.

N·m Clamp: **16 – 18 Nm {1.6 – 1.8 kgm}**

- When the tightening torque force is less than 16Nm{1.6kgm}, tighten it until the hand gap is adhered (BDG size is 0).

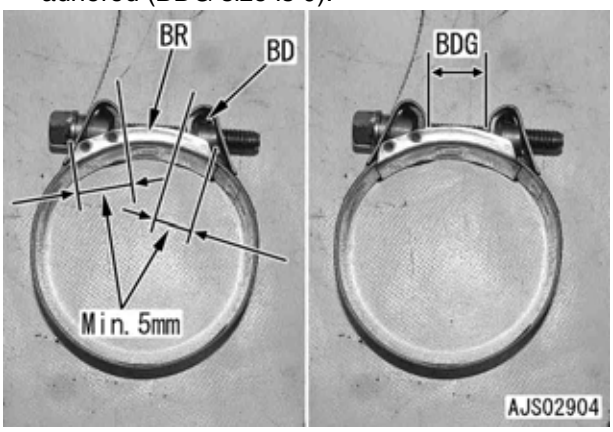

[*3]

N·m Joint bolt: **24 ± 4 Nm {2.4 ± 0.4 kgm}**

[*4]

N·m Mounting bolt: **24 ± 4 Nm {2.4 ± 0.4 kgm}**

[*5]

N·m Fuel block mounting bolt:
32 ± 4 Nm {3.3 ± 0.4 kgm}

[*6]

WARNING

When installing, keep the distance of more than 10 mm between the high-pressure pipe and the harness.

[*7], [*8], [*9], [*10], [*11]

✘ **High-pressure pipes and common rail**

⚠ WARNING

- **Do not use high-pressure pipes with bending modification.**
- **Be sure to use a genuine high-pressure pipe fixing clamp and observe strictly the tightening torque.**

✘ A high-pressure pipe which has depressions such as visible vertical slit scar (b), patchy scars (c) etc. on the taper seal section of its connector ((a) part: within 2mm from the tip), or a high-pressure pipe whose (d) part (end of the taper seal section: 2mm from the tip) catches on a finger nail due to fatigue, may cause fuel leakage. In these cases, replace the high-pressure pipe.

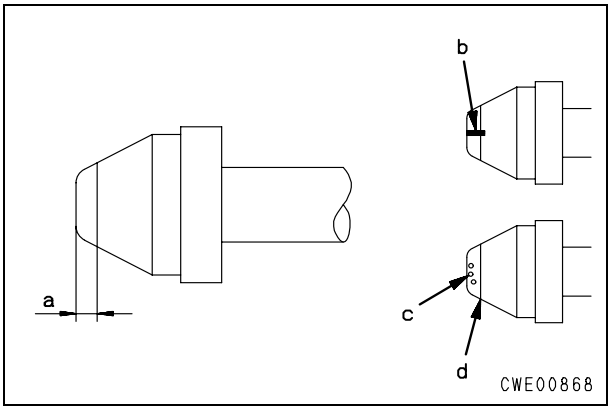

2.3. Assemble common rail (25) and high-pressure pipes (51) -(56) temporarily.

N·m Sleeve nut and mounting bolt: **0.2 – 0.8 Nm {0.02 – 0.08 kgm}**

2.4. Tighten high-pressure pipes (51) - (56) according to the following procedure.

N·m Sleeve nut: **35 ± 3.5 Nm {3.6 ± 0.4 kgm}**

2.4.1 Head side of high-pressure pipes (51) and (56)

2.4.2 Common rail (25) side of high-pressure pipes (51) and (56)

2.4.3 Head side of high-pressure pipes (52), (53), (54) and (55)

2.4.4 Common rail (25) side of high-pressure pipes (52), (53), (54) and (55)

2.5. Tighten the sleeve nut of high-pressure pipe (22) temporarily.

2.6. Tighten high-pressure pipe (22) in the order of firstly pump (FSP) side, then common rail (25) side.

N·m Sleeve nut: **35 ± 3.5 Nm {3.6 ± 0.4 kgm}**

2.7. Tighten clamp (21) of high-pressure pipe (22).

N·m Mounting bolt: **24 ± 4 Nm {2.4 ± 0.4 kgm}**

2.8. Tighten common rail (25) with four bolts.

✘ Coat the two bolt threads on the inner side of the engine with sealant (LG-7).

N·m Mounting bolt: **24 ± 4 Nm {2.4 ± 0.4 kgm}**

2.9. Install bellows (23) to each high-pressure pipe. (14 pieces)

✘ Set the slits of each bellows out and down.

✘ The bellows are installed so that fuel will not spout over the hot parts of the engine and catch fire when it leaks for some reason.

✘ FSP: Fuel supply pump

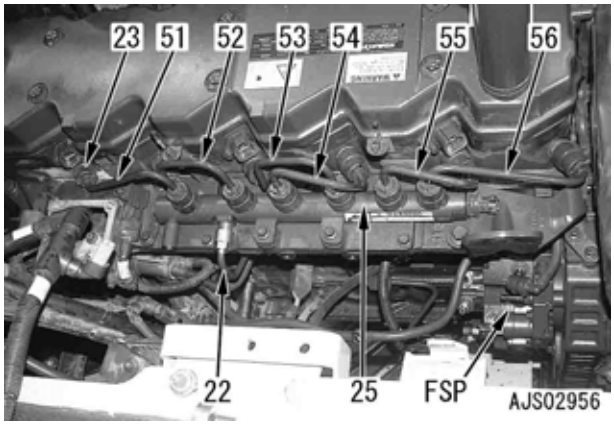

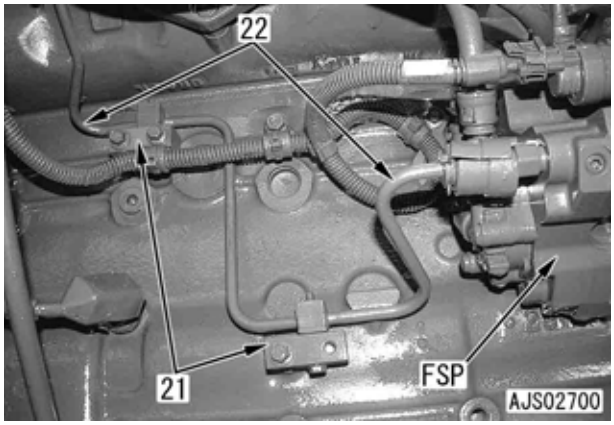

[*12]

N·m Blow-by duct mounting bolt: **10 ± 2 Nm {1.0 ± 0.2 kgm}**

[*13]

N·m Head cover mounting nut: **24 ± 4 Nm {2.4 ± 0.4 kgm}**

[*14]

a Harness installation position

Harness color	Cylinder No.
White	1, 3, 5
Black	2, 4, 6

Harness mounting nut:
1.5 ± 0.25 Nm {0.15 ± 0.03 kgm}

Removal and installation of engine front seal

Special tools

Symbol		Part number	Part name
A	1	795-799-6400	Seal puller
	6	790-331-1120	Wrench (Angle)

Removal

1. Remove the radiator assembly referring to the section of Removing Radiator Assembly.
2. Remove the hydraulic oil cooler assembly referring to the section of Removing Hydraulic Oil Cooler Assembly.
3. Remove the aftercooler assembly referring to the section of Removing Aftercooler Assembly.
4. Remove mounting bolts for air conditioner condenser (1) and put aside air conditioner condenser (1).
5. Remove bracket (2).
6. Remove cover (3).
7. Remove nets (4) and (5).
   ✗ Hydraulic oil cooler hoses **H1** and **H2** have already been removed with removal of oil cooler.

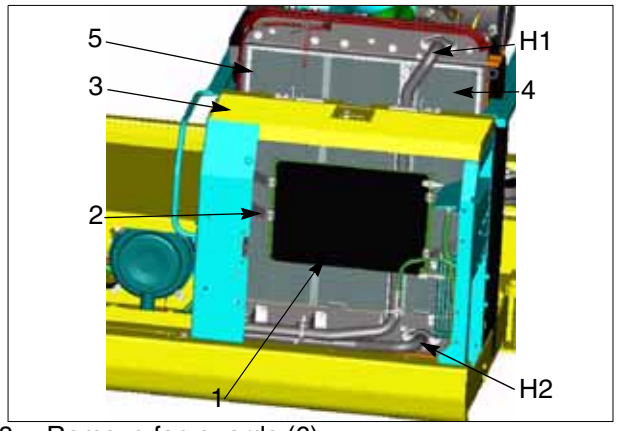

8. Remove fan guards (6).

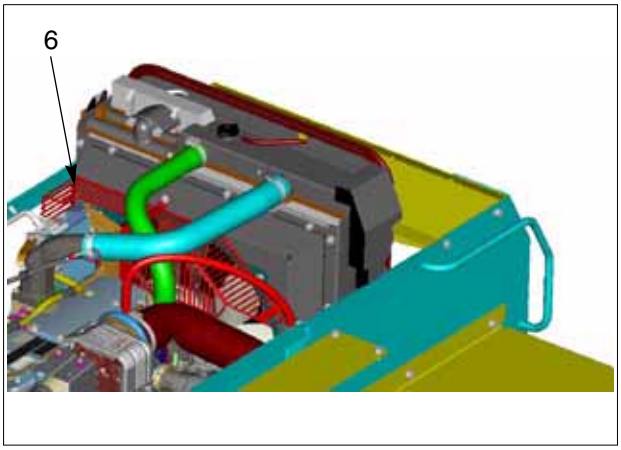

9. Remove fan (8). [*1]
10. Loosen air conditioner compressor bracket adjustment bolts (9).
    ✗ There is another bolt behind.
11. Move air conditioner compressor assembly (10).
12. Remove air conditioner compressor drive belt (11). [*2]

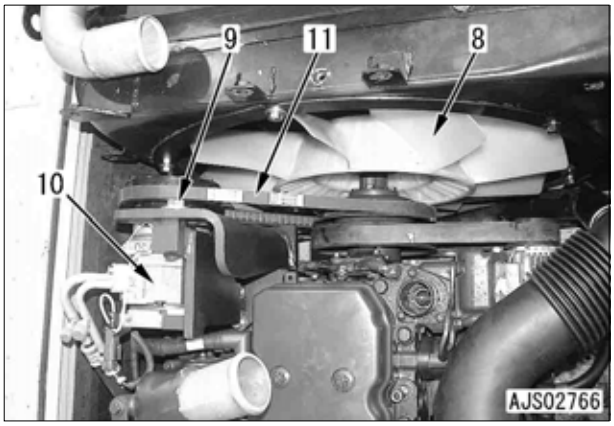

13. Loosen tension by inserting a wrench to **A** part, and remove alternator belt (12).
14. Remove six mounting bolts and remove vibration damper (13).

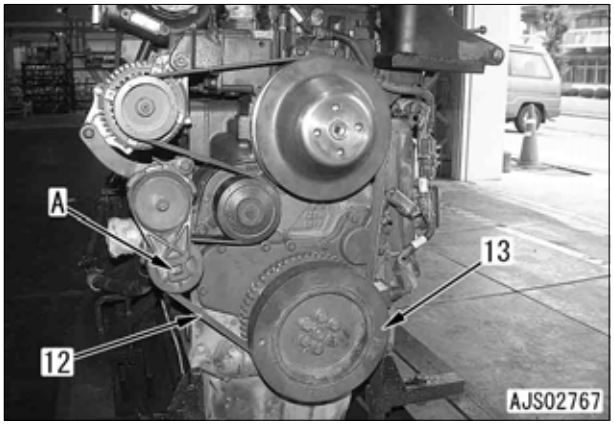

15. Remove seal (14).

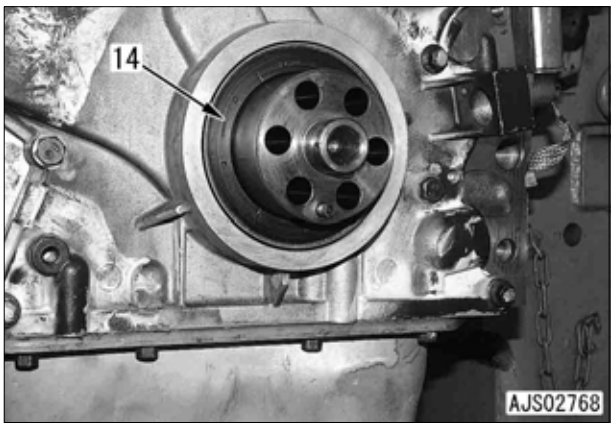

Installation

1. Install front seal (14) using tool **A1**.
   - ✗ Before installing the seal, check that the end corners and lip sliding surfaces of the crankshaft are free from flaw, burr, and rust of the housing.
   - ✗ When installing the seal, do not coat the shaft and seal lip with oil, grease etc. Also, wipe off grease from the shaft completely.

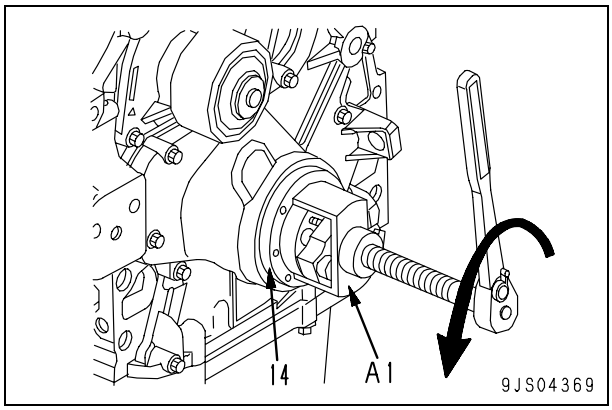

- ✗ From cover (C) of seal (14)
  - Extrusion **x**: **less than 0.38 mm**
  - Facial run out (TIR: total indicator reading) **y**: **less than 0.25 mm**

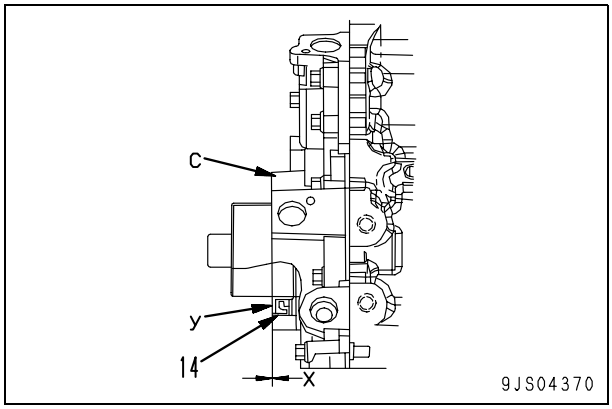

2. Vibration damper

2.1. Install vibration damper (13), aligning its dowel hole with dowel pin **a** of the crankshaft.

2.2. Tightening procedure of bolts (15)

2.2.1 Tighten to a torque of 55 ± 5 Nm {5.6 ± 0.5 kgm} in diagonal order.

2.2.2 Loosen the bolts 180°.

2.2.3 Tighten to a torque of 55 ± 5 Nm {5.6 ± 0.5 kgm} in diagonal order.

2.2.4 90° ± 5°

- ✗ Tool **A6**: wrench is adopted for angle tightening. (Refer to the tool list.) (Refer to the tool list.)

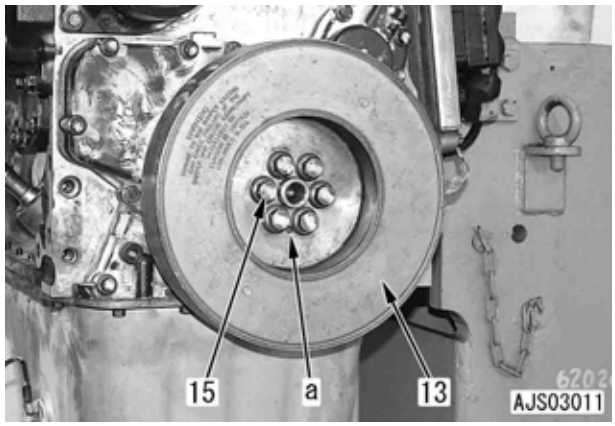

- ✗ When an angle tightening tool is not used: Put marks on the vibration damper and bolts with a felt-tip pen, and then tighten the bolts an additional **90° ± 5°**.

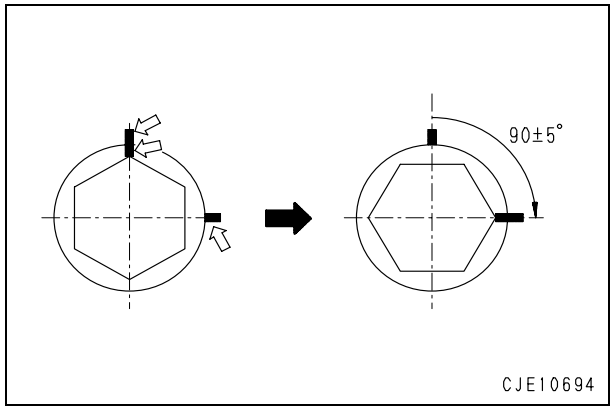

- ✗ Carry out the rest of installation in the reverse order to removal.

[*1]

N·m Fan mounting bolt:
43 ± 6 Nm {4.4 ± 0.6 kgm}

[*2]

a Refer to the Inspection and Adjustment of Air Compressor Belt Tension section in the Testing and adjusting chapter in this manual.