Shroud Removal And Installation

Remove the cooling fan. (See Cooling Fan Removal And Installation on Page 50-50-4.)

Figure 50-50-10

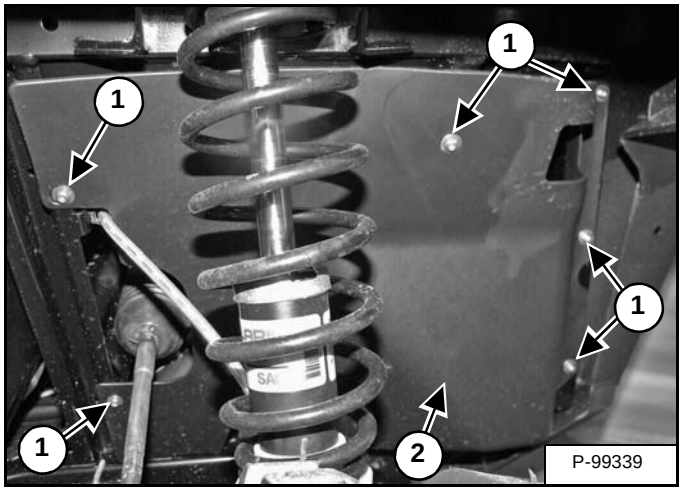

Remove the screws (Item 1) and remove the wheel well panel (Item 2) **[Figure 50-50-10]**. Repeat the procedure for the other wheel well panel.

Figure 50-50-11

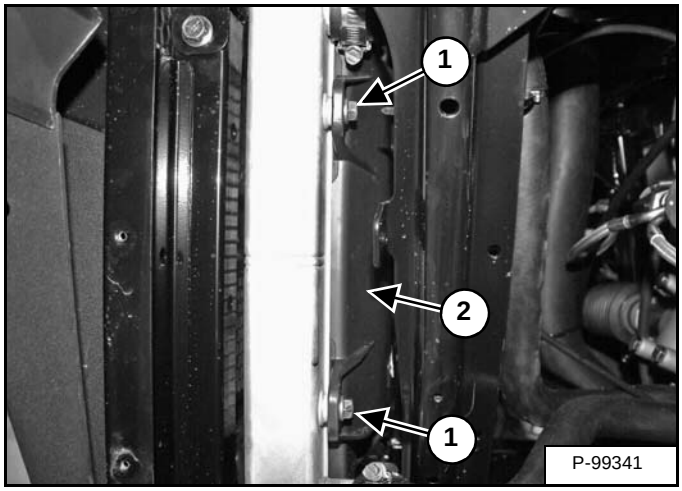

Remove the bolts (Item 1) securing the shroud (Item 2) **[Figure 50-50-11]** to the radiator.

Figure 50-50-12

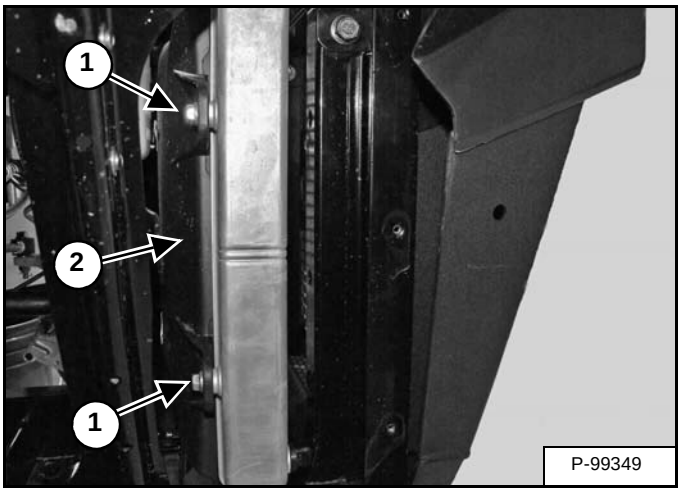

Remove the bolts (Item 1) securing the shroud (Item 2) **[Figure 50-50-12]** to the radiator.

Installation: To prevent damage to the shroud, do not overtighten the bolts when installing.

Figure 50-50-13

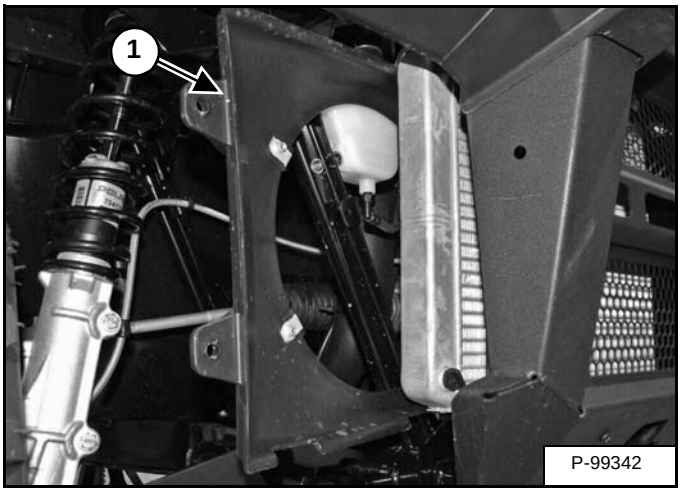

Remove the shroud (Item 1) **[Figure 50-50-13]** from the right side wheel well.

Water Pump Housing Cover Removal And Installation

Remove the seat.

Drain the coolant from the radiator. (See Cooling System Pressure Test on Page 50-50-1.)

Figure 50-50-14

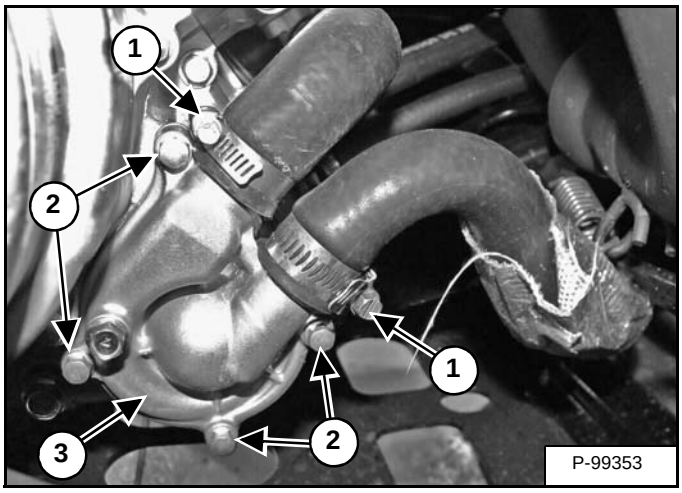

Loosen the clamps (Item 1) **[Figure 50-50-14]** and disconnect the hoses.

Remove the water pump housing cover mounting bolts (Item 2) **[Figure 50-50-14]**.

Installation: Tighten the water pump housing cover bolts to 5 - 6.5 ft.-lb. (7 - 9 N•m) torque.

Remove the water pump housing cover (Item 3) **[Figure 50-50-14]**.

Installation: Always use a new gasket when installing the water pump housing cover.

Water Pump Disassembly And Assembly

Remove the water pump housing cover. (See Water Pump Housing Cover Removal And Installation on Page 50-50-6.)

Figure 50-50-15

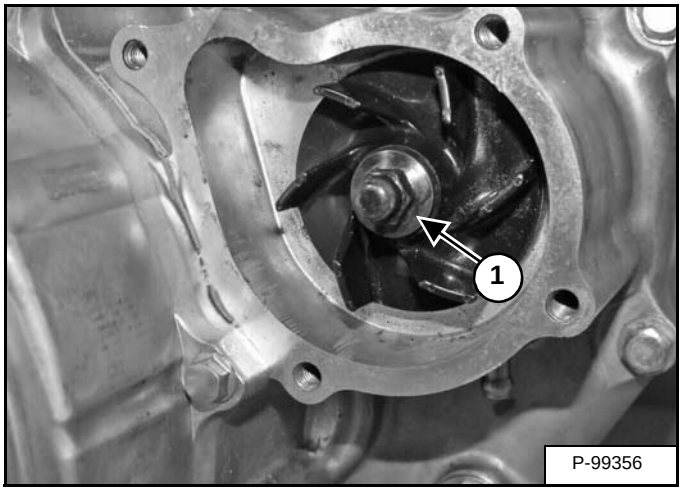

Remove the water pump impeller nut (Item 1) **[Figure 50-50-15]** from the shaft.

Installation: Tighten the water pump impeller nut to 5 - 6.5 ft.-lb. (7 - 9 N•m) torque.

Figure 50-50-16

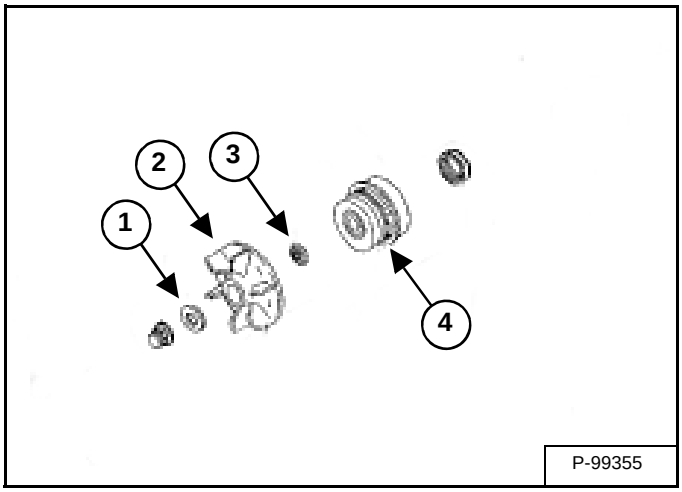

Remove the sealing washer (copper or aluminum) (Item 1), impeller (Item 2) and sealing washer (Item 3) **[Figure 50-50-16]** from the shaft.

The water pump mechanical seal (Item 4) **[Figure 50-50-16]** can be replaced with the water pump removed. (See Water Pump Mechanical Seal Removal (Engine Installed) on Page 50-50-7.)

Water Pump Mechanical Seal Removal (Engine Installed)

Remove the water pump. (See Water Pump Housing Cover Removal And Installation on Page 50-50-6.)

Order water pump mechanical seal puller (PN 2872105) from Bobcat Parts.

A replacement T-handle is also available, order (PN 2872106) from Bobcat Parts if needed.

This tool allows a technician to replace the mechanical pump seal on EH46PL engines without removing the engine and splitting the cases.

IMPORTANT

Improper or careless use of this tool or procedurecan result in a bent water pump shaft. Pump shaftreplacement requires engine removal and crankcaseseparation. Use caution while performing thisprocedure. Make sure that the puller is parallel to theshaft at all times. Do not place side loads on thewater pump shaft or strike the puller or shaft in anyway.

I-2311-0510

Figure 50-50-17

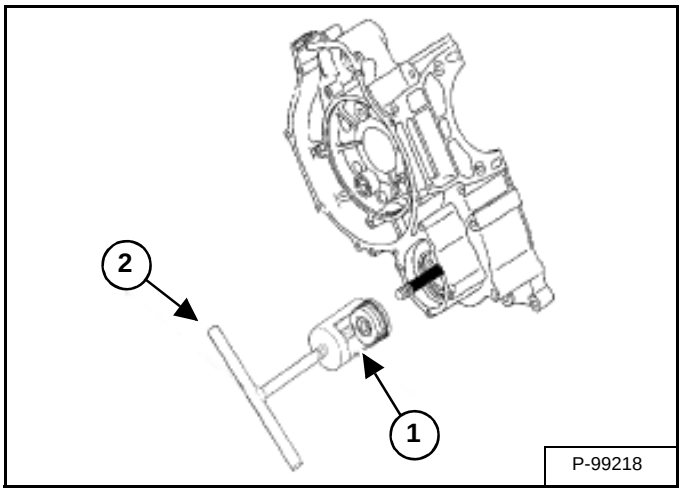

Slide the main puller body (Item 1) over the outer portion of the mechanical seal as shown, and turn T-handle (Item 2) **[Figure 50-50-17]** clockwise until it contacts water pump shaft. Continue rotating until outer portion of mechanical seal is separated from the metal seal body.

Figure 50-50-18

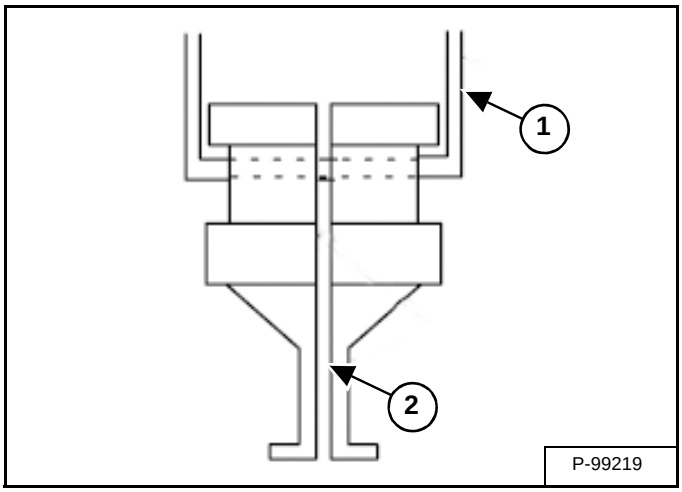

Insert the puller legs between the water pump drive shaft and the remaining portion of the mechanical seal. Attach the puller legs to the main puller body (Item 1) with the split (Item 2) **[Figure 50-50-18]** 90° to opening on main puller body.

Ensure that the split between the puller legs is fully supported by the main body of the tool.

Figure 50-50-19

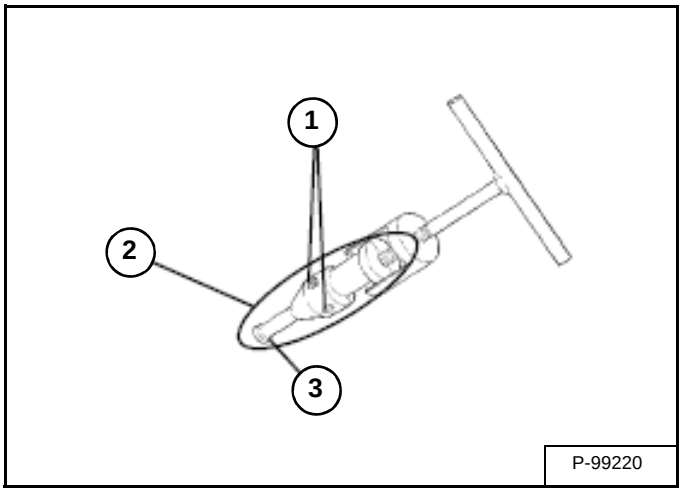

Tighten the hex socket screws (Item 1) on the puller legs (Item 2) sufficiently so the lip (Item 3) **[Figure 50-50-19]** of the puller legs will grasp the mechanical seal.

Water Pump Mechanical Seal Removal (Engine Installed) (Cont'd)

Figure 50-50-20

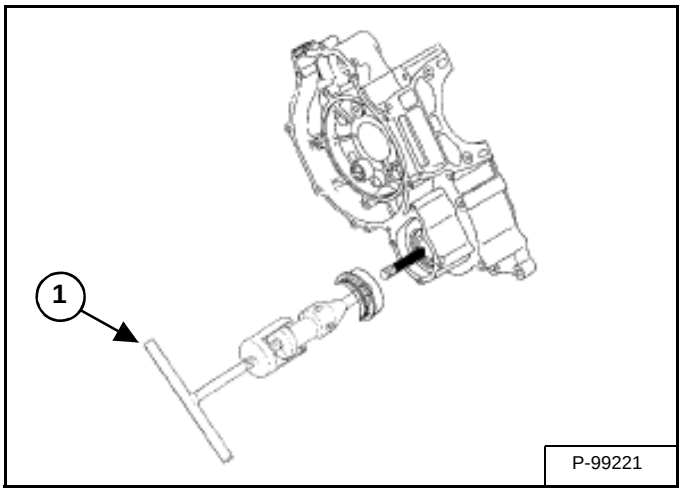

Turn the puller T-handle (Item 1) **[Figure 50-50-20]** clockwise until it contacts the water pump shaft. Continue rotating until the remaining portion of the mechanical seal has been removed from the cases. Pump shaft oil seal can also be replaced at this time.

To install the water pump mechanical seal, (See Water Pump Mechanical Seal Removal (Engine Installed) on Page 50-50-7.)