# FUEL INJECTION PUMP

## CHECKING AND INSPECTION

**A. Air tightness of the plunger barrel**

To test for air-tightness. Assemble the related parts in the standard condition and apply air pressure at 2 kg/cm$^2$ into the plunger barrel through the fuel inlet port. Check for air leak.

**B. Play of the tappet**

Measure the play of the tappet (1) by using a dial gauge (2).

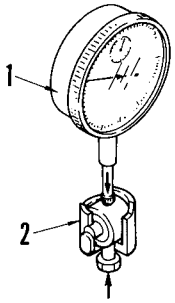


05F033

**C. Suction function of the delivery valve**

Give a light push to the valve with the valve seat bottom closed by a finger. Then, check the valve by releasing the finger to see if the valve springs back easily.

05P003

**D. Sliding condition of the plunger**

Hold the plunger at approx. 60° from the vertical, and check to see if the plunger slides down smoothly without interruption.

★ This action should be repeated several times by turing the plunger around.

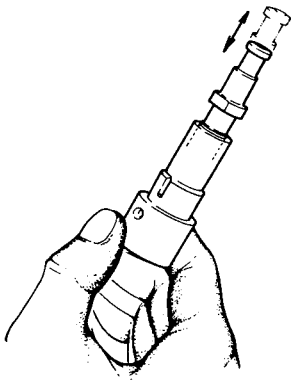

05F034

★ If there is a trouble in the delivery valve plunger, replace it as a set for one machine.

**E. Air tightness at the feed pump**

Securely plug the discharge port of the pump and immerse the pump in an oil bath, then apply air pressure at 2 kg/cm$^2$.

Check the pump for air leak.

**F. Suction capacity of the feed pump**

Connect a pipe, 2 m long and 8 mm in I.D. to the suction port of the pump. Then, pump at a rate of approx. 100 strokes/min. At this pumping rate, measure the number of strokes required to pump up fuel oil from a point 1 m below; till the oil is discharged from the pump's outlet.

**G. Delivery pressure of the feed pump**

Connect a pipe, 2 m long and 8 mm in I.D. to the suction port of the pump. Then, operate the pump at the speed of 1,000 rpm. After which, measure the amount of oil discharged for 15 seconds, when the delivery pressure is regulated to 1.6 kg/cm$^2$.

# TURBOCHARGER

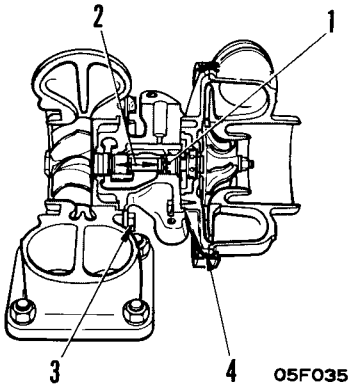


Unit: mm

| No. | Check Item | Criteria | | Remedy |
|---|---|---|---|---|
| 1 | Radial play of the rotor | Tolerance | Service Limit | Repair or replace |
| | | 0.075 ~ 0.150 | 0.18 | |
| 2 | End play of the rotor | 0.025 ~ 0.075 | 0.10 | |
| 3 | Tightening torque of the rotor ass'y mounting bolts | Target Value (kg·m) | Range (kg·m) | Tighten |
| | | 1.3 | 1.15 ~ 1.5 | |
| 4 | Tightening torque of V-band | 0.8 | 0.7 ~ 0.9 | |